systainer®

Main Catalog

TANOS

systainer®
TANOS Main Catalog

UNIQUE. PATENTED. UNSURPASSED.
STACKABLE. LINKABLE. THE systainer®
IS NOT JUST A CASE, IT'S A SYSTEM.

NEW

Systainer³

Even more reliable, with more functions and broader applications – that's Systainer³. The third generation stands for even better mobility with a comprehensive mobility concept. Enjoy the advantages you trust with the Systainer³: T-Loc central controller, compatible with one another and connectable with all previous systainer® generations.

systainer® T-Loc

Just one touch is all you need! Systematically stack individual systainer® and lock them with a flick of the wrist – this generation offers innovative T-Loc central controller technology: lock, open, connect. The second generation combines innovation with function and attractive design.

systainer® Classic-Line

Proven top class quality! Our systainer® Classic-Line has been accompanying millions of satisfied customers through their everyday work for many years. Of course, it can be combined with all other systainer® generations.

CONTENTS

TANOS systainer®

Page 4 - 17

From the past to the future Page 4 - 5

systainer® applications Page 6 - 7

More than just a case Page 8 - 9

Distinctive Page 10 - 13

systainer® system partners Page 14 - 15

Systainer³ connects Page 16 - 17

systainer® – CONVINCING ARGUMENTS

Page 18 - 29

Linkable Page 18 - 19

Quick & Easy Page 20 - 21

Mobile Page 22 - 23

Multifunctional Page 24 - 25

Reliable Page 26 - 27

Versatile Page 28 - 29

systainer® PRODUCT RANGE

Page 32 - 87

TANOS
systainer®

FROM THE PAST TO THE FUTURE

TANOS GmbH was founded in 1993 as a subsidiary of TTS Tooltechnic Systems AG & Co. KG. Developing and distributing the systainer® product range is our passion. Secure packaging and clear organization of your work materials and tools, and saving time during transportation – systainer® products provide all of these benefits and more. As the inventors of this unique, patented case system, we have created cases that can be stacked and linked together. Our concept makes a systainer® more than just a case: It's a system!

1993
systainer® Classic-Line

The systainer® success story begins. Thanks to TANOS systainer® products are available to everyone.

1 millionth
systainer® sold in 1996.

10 millionth
systainer® sold in 2008.

2010
systainer® T-Loc

Global debut:
Market launch of the second systainer® generation with unique T-Loc central controller.

20 millionth
systainer® sold in 2015.

25 millionth
systainer® sold in 2018.

2018
TANOS goes USA:
The founding of TANOS Inc./USA ensures systainer® is now directly available in the USA as well.

2018
New standard for mobile work:
The mobile workshop MW 1000.

2019
Systainer³

Market launch of the innovative third generation: 100 % mobile, simply practical, better in a system. Cooperation between TANOS, bott and Festool to develop a comprehensive, consistent mobility concept.

2020
The Systainer³ system has won numerous design awards for outstanding design quality.

2020
Think big – Systainer³ XXL with plenty of space and volume!

2021
German Brand Award – Special Mention in the category "Excellent Brands – Tools and Gardening". for outstanding brand work by TANOS.

2021
New Systainer³ ToolBox – the convertible Version expands the Systainer³ System.

2022
Foundation of the joint venture Systainer Systems North America, LLC of bott and TANOS for the marketing of systainer® and bott Smartvan in the USA/North America.

2022
Everything sorted and organized:
Systainer³ lid compartment M in 3 heights completes the system.

2023
30 Years TANOS

2023
Systainer³ ToolBag M:
Flexible organization with leading design.

2023
Systainer³ Eco:
Mobile system case in a sustainable version – the first of its generation made from sustainable recycled material.

40 millionth
systainer® sold in 2024.

2024
Systainer³ Combi M + Systainer³ Sortainer M:
New sorting and storage solutions for workshops, vehicles and construction sites.

2024
Systainer³ Rack:
Mobile small parts rack for every need

2024
Systainer³ S 76 + 147:
The space saver for storing small parts.

TANOS
systainer®

A SMALL SELECTION OF systainer® APPLICATIONS

INDUSTRY

TRADES

MEDICAL

SALES REPRESENTATIVE EQUIPMENT

SPORTS & LEISURE

VEHICLE EQUIPMENT

A SOLUTION FOR ANY JOB

TRADES
Whether you're a do-it-yourselfer or an nationwide trade company, the systainer® is custom-tailored to fulfill your needs and requirements.

INDUSTRY
If you want to sell and present your products with a high-quality image, the systainer® is a perfect building block in your brand strategy.

MEDICAL
Safety and reliability in transportation and handling are essential in the medical field. A systainer® impresses everywhere and anytime.

IN USE EVERYWHERE

Your systainer® system offers an endless range of potential applications, in many different industries and sectors. Clearly, systainer® products are a popular choice in trades and industrial applications. But systainer® are also an all-around system built to handle specialized demands and requirements. Innovative developments, accessories, variables, a variety of internal features and easy linking options make the systainer® a smart system for your needs.

SALES REPRESENTATIVE EQUIPMENT

Put your products in the limelight! systainer® offers individual, customized solutions for product presentation, for even more successful field sales.

SPORTS & LEISURE

Whether sport fishing or climbing – a systainer® is the perfect choice to store all your sporting equipment in one place.

VEHICLE EQUIPMENT

Our systainer® can be integrated as part of your vehicle equipment. Mobile and flexible – make your work more effective.

TANOS
systainer®

STACKABLE AND LINKABLE
Individual systainer® can be combined, securely stacked, firmly linked and can still be operated individually at the same time.

TRANSPORT OPTIMIZATION
Standardized dimensions sized for Euro pallets allow boxes to be stacked across the whole surface, saving volume and cash during transportation on pallets – whether in a truck, a warehouse, or a retail store.

LONG-LASTING DESIGN
If it breaks, fix it!
All systainer® components, such as lids, handles and catches can be replaced.

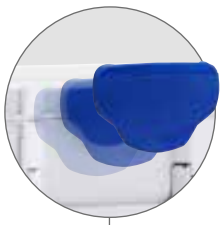

ABS* PLASTIC
The best base material combined with a sturdy design offers outstanding structural strength.

*ABS = Acrylinitril-Butadien-Styrol

VARIETY OF COLORS
Besides our standard colors, additional colors are available. In addition, colors for the catch, handle and body can be selected individually for custom combinations. No minimum order required.

DESIGNED IN GERMANY

DEVELOPED IN HOUSE
Our research and development department with highly qualified engineers and product managers works continuously on the innovative further development of our products with ISO 9001 certification.

HIGHLY AUTOMATED PRODUCTION
Thanks to standardized processes, we guarantee consistent, high product quality and quality controlling in Germany and Europe.

ENVIRONMENT & SUSTAINABILITY
The systainer® produced from recyclable ABS ensure more environmentally friendly, recyclable packaging you can use for years, and therefore help to avoid waste.

MORE THAN JUST A CASE

Today, flexibility on the job is essential. Each and every systainer® is not just a case, but rather part of a cleverly designed system. This allows you to prepare for and react optimally to your work needs. The different possible combinations, and variable interior options for your systainer® are virtually endless. Easily change the arrangement of your systainer® tower to meet your personal needs. All systainer® are stackable and linkable!

AWARD-WINNING systainer® T-LOC SYSTEM
Multiple awards and consistently positive test results are truly a reflection of the enthusiasm for innovative technologies and the long-lasting, high quality standard of this system.

STILL THE ORIGINAL
The entire systainer® portfolio is fully protected by a various property rights. The original systainer® is and remains an original. You can rely on that.

TANOS
systainer®

HOW TO DESIGN A CUSTOM systainer®

Step 1: Describe the problem
Do you need a packaging solution for your products, or an organizational, presentation or transportation system? No matter what quantity you need, ask us! We want to be your partner.

Step 2: Find the solution
Standard product range, or specially tailored to meet your needs? We are happy to develop the interior features you need, and build a sample if necessary.

Step 3: Corporate design
Use the systainer® as a product and brand ambassador. We will be happy to advise you and present a variety of options to you.

Step 4: Market launch
Your custom systainer® is ready for use.

ADDITIONAL SERVICE
Step 5: Assembly
You send your product and we package it. Upon request, we can attach your custom label and even purchase third party products.

ADDITIONAL SERVICE
Step 6: Shipment
We are happy to handle shipping logistics for you, and ensure your systainer® arrive safely.

TIP: Offer your custom designed systainer®, even without inserts. Color matched and with your own logo!

TANOS – YOUR PACKAGING SPECIALIST

YOUR PACKAGING SOLUTION – THE systainer®
We have already implemented countless customized products in collaboration with our partners. Specialized bottom and lid inserts, deep drawn parts matched to your product or one and two color foam – your customization options know no limits. Ask us, we will be happy to professionally handle your requirements.

DISTINCTIVE

Each and every systainer® is important to us. Whether you choose a standard version with available system components or a custom special design tailored to your needs. We support you, from initial idea to delivery. Design, color, interior features, formats, or applications: we look forward to presenting the countless possibilities of the systainer® system to you. Benefit from the case system already used by numerous well-known manufacturers.

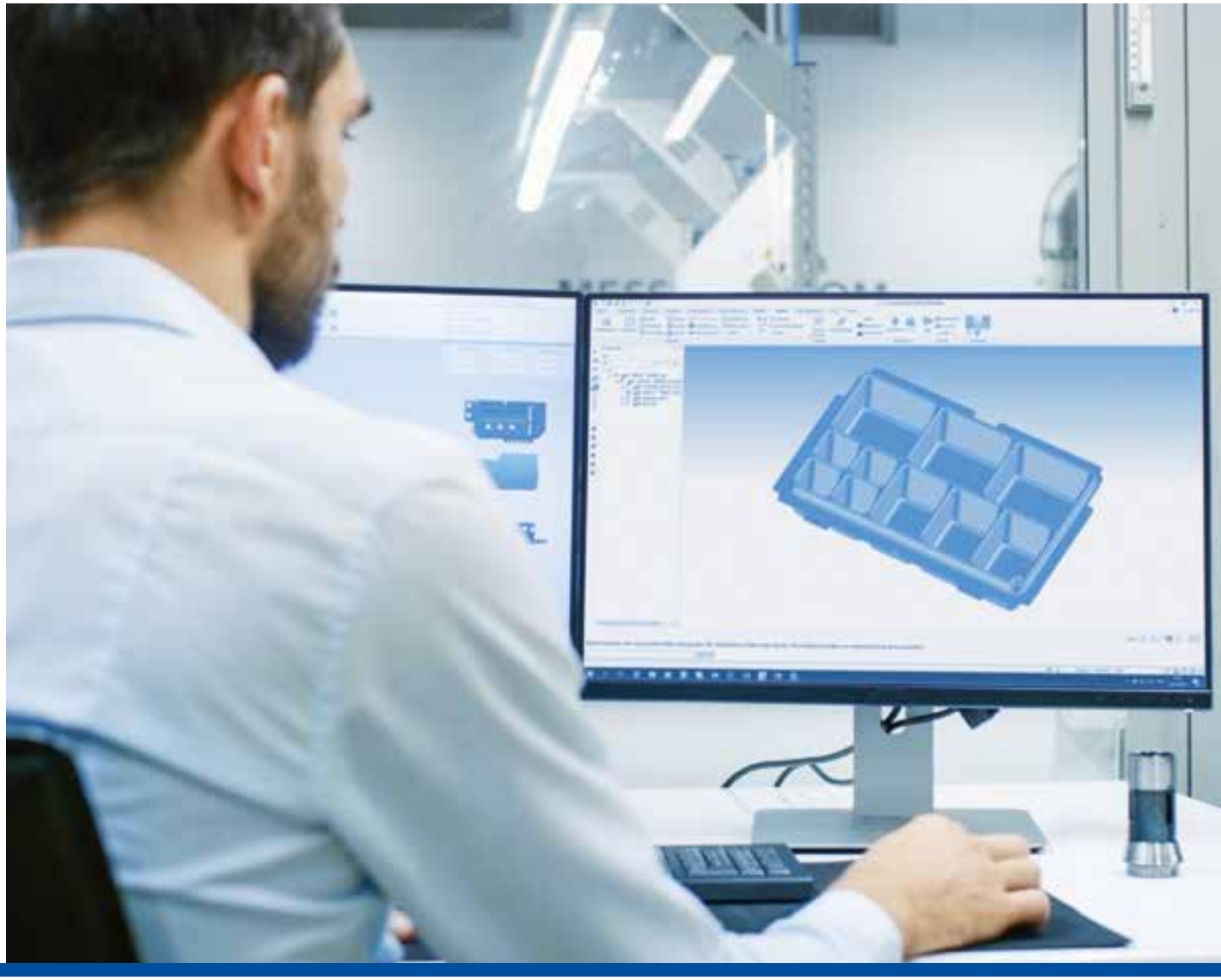

THEFT-TAG – BETTER SAFE THAN SORRY

Benefit for manufacturers and dealers: the “Theft Tag” closure is integrated directly on the Systainer³. All-around theft protection: everything safe and enclosed. No more illicit removals of products. Also a major advantage in the medical sector, e.g. for sealing medical examination materials.

TANOS
systainer®

CORPORATE DESIGN
No brand strategy without branding. Whether you want to add your company logo or your slogan – even with small quantities, you can print the body, lid and catches with multiple colors. Thanks to the modular design, you can assemble your own systainer® from our extensive color palette. Brand recognition guaranteed!

LABELING
Simple and practical labeling of your systainer® with labeling sets for card inserts.

CONFIGURATION
Simple and innovative system to design your custom systainer® in just a few steps.

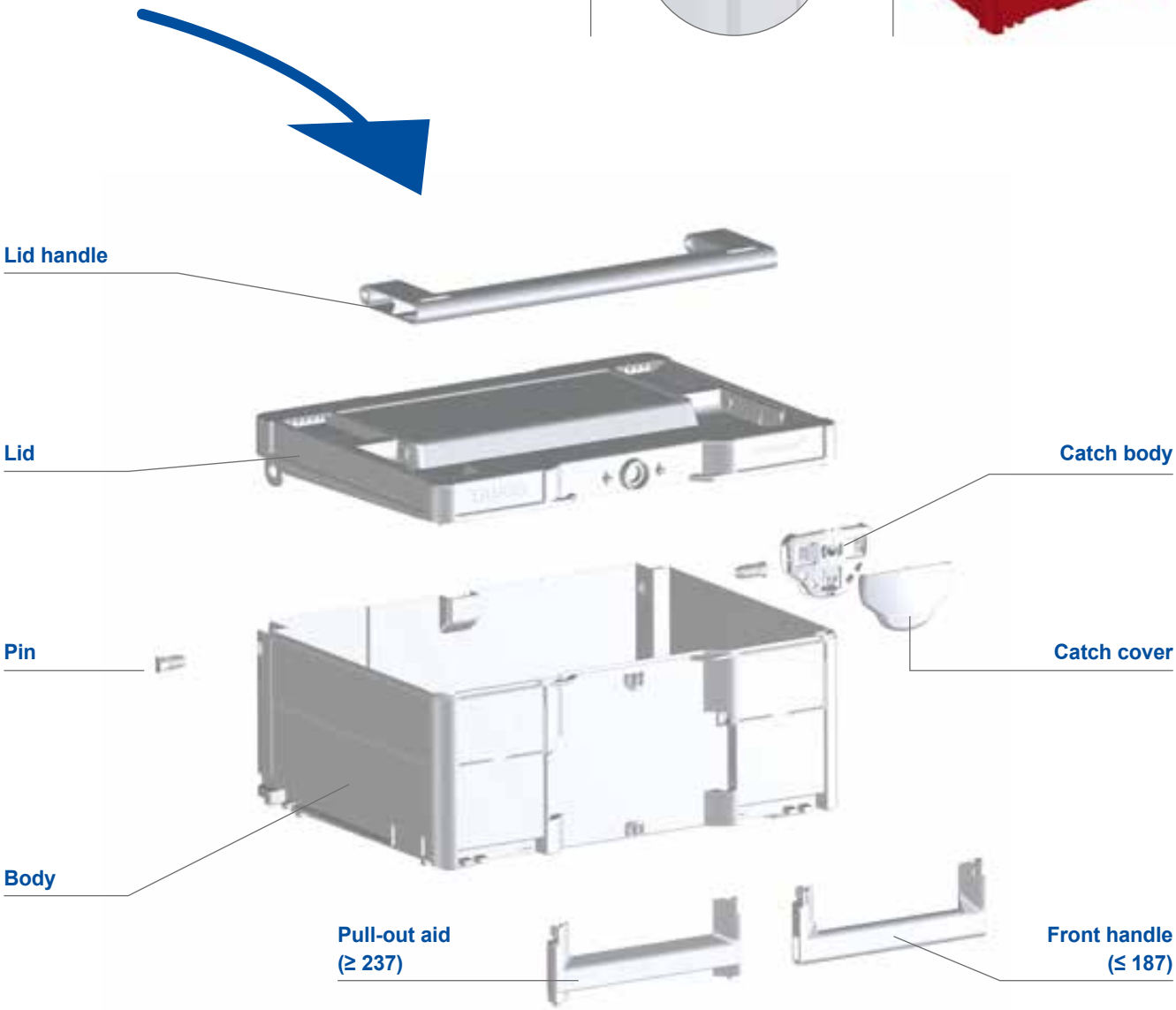

EXTRA TIPS

PERFECT CUSTOMIZATION
At larger order quantities, we can also emboss your product or company brand directly to the right and left of the edge of the lid or on the lid of your systainer®.

COLOR PALETTE

Do you prefer bright and colorful or discreet and reserved? We offer our timeless standard design in light grey with signal blue catch or all anthracite at no additional charge.

Numerous additional RAL color shades are available ex works. Do you need a custom color? No problem, we will be happy to advise you!

STANDARD COLORS

- RAL 7035, light grey
- HKS 43 K, signal blue
- RAL 7016, anthracite

ADDITIONAL COLORS

- RAL 9004, black
- RAL 1007, daffodil yellow
- RAL 2011, deep orange
- RAL 3002, carmine red
- RAL 5015, sky blue
- RAL 5003, sapphire blue
- RAL 6001, emerald green
- HKS 54 K, signal green
- RAL 9016, white

IT'S WHAT'S INSIDE THAT COUNTS

Ask us! We will provide you with professional support and advising, no matter your idea or requirement. Whether you plan to use the systainer® as packaging or to present your products, to transport sensitive goods or to equip your workshops or production warehouses in an organized way – we will construct, develop and design your custom systainer® solution to precisely meet your needs.

Standard product range

Special design

YOUR PRODUCT AMBASSADOR

You can even use the interior areas as an advertising surface! Use the systainer® lid for important product information or user instructions.

TANOS
systainer®

systainer® SYSTEM PARTNERS: A SMALL EXCERPT

3M, ABB, ABUS, ADIRO, Alfa, ARTUS, Arvid Nilsson, BENZ, BERNER, BESSEY
B&G, BGS technic, blizz-z, bott, BRAUN, BTI, c medical, case it, Clenio, compa storer
CONRAD, CONTORION, CRONITEX, DICTUM, Dinova, Döllken Profiles, Dr. Schutz GROUP, DÜRR TECHNIK, ebro a xylem brand, EDUXPERT
EHINGER SCHWARZ 1876, ENDEL & DIETZE, erke, FAST, felo, FESTO, FESTOOL, Flexident, FLEXMO KÖGL, FRANZEN
FRÜH maschinen, GOK, GRACO, HARTING, HÄFELE, HECO SCHRAUBEN, hedue, holbach UMWELTANALYTIK, HOMAG, Husqvarna Group
INTERMED, Janitza, janser, KLATT, KLUGE, KNIPEX, Kreg, KUKKO, Lamello, Lägler www.laegler.com
Linz, mafell, Makita, Meffert AG Farbwerke, MEGA GRUPPE, MENZER, MKT, munga, MÜPRO
OBO BETTERMANN, OSTERMANN, Panasonic, PPS, PREBENA, PROFITEC, PulmoKard, REPAIR CARE, RENOTOOL, RICHARD SCHULZE
rosenbauer, RUWI, SANDOSIN, SCHELLENBERG, SHAPER, SIEMENS, SENCO, SIMONSWERK, soa PAINT AND PAPER, soleon
SPAX, SPÄTH FARBEN PUTZE KNOLL www.spaeth24.de, starmix, STIER, STIHL, STORCH, STRIEBEL & JOHN, STULZ CLIMATE. CUSTOMIZED., tapo fix, TTI SUCCESS INSIGHTS
TEBO, tesa, Tex-Color, TOPSPIN POWERTOOLS, TPH. waterproofing systems, transfer-BAR, Transpo safe by BRADY, U-SCRIBE JIG, VOLLMER, VOLTCRAFT
WGB Das Werkzeug, WOODCRAFT, Woodpeckers, WOODIES ULTIMATE, WOLFF, ed wruhs, ...

IMPRESSIVE NUMBERS

63 DIFFERENT systainer® VARIATIONS

Innovation and creativity are the drivers behind everything we do. We don't just want to fulfill your requirements; we also want to meet your needs.

AN ENDLESS RANGE OF COMBINATIONS

systainer® does what you want! Virtually unlimited possibilities allow for perfectly tailored customization.

EVERYTHING BUILDS ON THE systainer®

As the manufacturer of the most popular linkable case system on the market, we believe in the power of experience: To get where you're going, you've got to know where you've been! The success of the systainer® proves us, and you, right. We'd like to say a huge thank you to our customers and partners! Over 40 million systainer® sold have made our system what it is today. You can build on the systainer®, since 1993. It's here today, and it will be here tomorrow as well. We promise.

MORE THAN 40 MILLION systainer®
A big thank you to our customers and partners! The systainer® is conquering the world and we are delighted with more than 40 million sold systainer®.

3 PRODUCT LINES, 1 SYSTEM
Systainer³, systainer® T-Loc, systainer® Classic-Line: Unique, clever, stackable, and linkable. Together, on top of one another, and across brands.

MILLIONS
OF SATISFIED USERS SPEAK FOR THEMSELVES.

systainer®
The new generation

Systainer³ CONNECTS

Custom-tailored vehicle integration for simple and secure transportation. With a uniform packaging and transportation system, optimally integrated into a vehicle equipment, Systainer³ keeps everything clearly organized and safely stowed, from your stationary workshop to your mobile work site.

TANOS, bott and Festool have worked together to develop a mobility system that integrates perfectly with the bott vario3 in-vehicle equipment. Now, you can take the order and the simple handling of the systainer® system, safely with you in your vehicle. You benefit from a well thought-out mobility concept and an even more professional image toward your customers.

Systainer³ CONNECTS SOLUTIONS

LINKABLE
"With systainer®, I've got a friend for life."

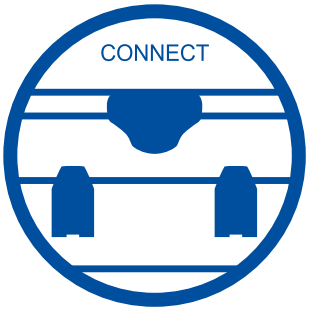

VERSATILE
"With systainer®, I'm working with a system."

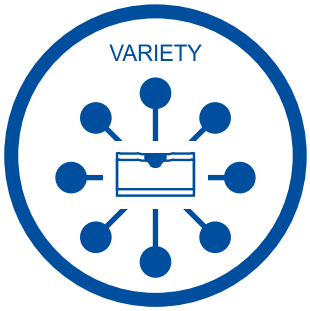

QUICK & EASY
"The systainer® makes my everyday work easier."

Trusted
T-Loc central controller

Secure
Theft-tag catch system

RELIABLE
"With systainer®, I've got a reliable partner."

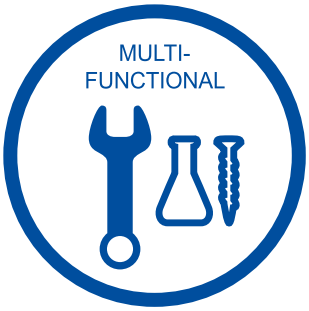

MULTIFUNCTIONAL
"The systainer® does what I want."

MOBILE
"The systainer® is a perfect fit for 100% mobility."

systainer®
The new generation

WITH SYSTAINER I'VE GOT A FRIEND FOR LIFE

Systainer³

CONNECT

LINKABLE

Stackable and linkable – our market-leading, patented case system helps millions of users with their everyday work. systainer® impress in everyday use. They link together quickly, saving lots of time and unnecessary walking. systainer® towers can be carried with a single handle, offering excellent convinience and mobility. Our new Systainer³ product line impresses with the ability to link cases of different generations. They can be combined with existing systainer® product lines as well as with systainer® system partners.

Stackable
Link systainer® to create a systainer® tower with a simple turn.

Compatibility
All systainer® can be combined with one another.

Versatile combinations

systainer® ToolBox
The perfect ToolBox – available in four sizes.

Systainer³ ToolBag M
Flexible organization with leading design.

Systainer³ Combi + Sortainer M
Sorting and storage solutions for workshops, vehicles and construction sites.

systainer®
The new generation

THE SYSTAINER MAKES MY EVERYDAY WORK EASIER

Systainer³

QUICK & EASY

QUICK & EASY

Easy to operate and convenient in everyday work. Close, open and link using trusted, patented and unique T-Loc central controller. Easily access contents, connect or remove systainer® with just one hand and just one turn. In addition, transportation is easier than ever before with the Systainer³. Whether upright, individually or as a linked tower.

Open while linked
Access contents with just one motion, without breaking the links between cases.

One hand operation
Close, open and link with just one turn.

Automated
Lid closes easier thanks to our optimized design.

Pull-out aid
Above size 237, a pull-out aid makes it easier to remove the case from a shelf or vehicle.

Front handle
Systainer³ M + L 112-187 and Systainer³ Organizer M + L can also be carried upright thanks to their front handles and well thought-out design.

Easy transportation
Easily transport cases individually or as a tower using the front handle, or the lid handle. Move faster and enjoy better convenience with the Systainer³.

TIP: Innovative labeling
Know what's inside! Two slots for custom labeling.

systainer®
The new generation

THE SYSTAINER OFFERS A PERFECT FIT FOR 100% MOBIITY

Systainer³

MOBILE SYSTEM

MOBILE

Use all the advantages of the systainer® system and benefit from the additional mobility offered by the third generation, which was a specific focus during development. It makes everyday work even easier for professional users, from the workshop to the construction site. Save space, time and strengthen your reputation with the Systainer³.

Perfect use of space
systainer® use standardized grid dimensions for optimal use of space in the vehicle, meaning they fit into many common vehicle equipment systems.

Access made easy
With the pull-out aid and optimized lid handle, the Systainer³ is easier to remove and use quickly.

Even simpler transportation
The new generation has redefined a combination of convinience and function. The Systainer³ can be stowed easily and quickly, secure for transportation without any additional rail elements in bott vario3 van racking.

systainer®
The new generation

THE SYSTAINER DOES WHAT I WANT

Systainer³

MULTI-
FUNCTIONAL

MULTIFUNCTIONAL

The variable features offered for systainer® are the alpha and omega for meeting any requirement. With accessories, lid and bottom inserts, organizing and sorting systems and a larger selection of heights and widths, the new generation Systainer³ offers an almost limitless range of variations for any need. Clear and simple, with optimal usage of space. The systainer® stands up to any challenge; there's always a systainer® solution.

Systainer³ Rack M:
The mobile small parts rack for the construction site, workshop and when on the road. The Systainer³ Rack with the practical storage solution for a total of six Systainer³ S 76.

For fans of structure:
Small parts sorting for professionals. With Systainer³ Organizer and its insert boxes, every small part has its place and is clearly sorted.

Systainer³ Organizer in two sizes
In addition to the M 89 size, the L 89 variation is available for even broader sorting options.

Storage
Molded compartments for your tools, with user-friendly packaging. From universal to specialized inserts, the systainer® has the right option for your specific needs.

Space saver
Optimal use of available space.

Clearly organized
Clearly organized storage and availability for materials you use every day. Everything at a single glance!

Big, bigger, Systainer³
With XXS-XXL sizes, the Systainer³ generation offers a large spectrum of heights and widths. The right size for every requirement.

systainer®
The new generation

Systainer³

RELIABLE

All Systainer³ offer outstanding strength thanks to their ABS* base material, combined with an innovative and stabilizing design structure. Your products are always safely stored, reliably packaged, and ready for transportation at any time with a Systainer³. With the Systainer³ quality case system, you have a reliable partner for your everyday work.

HARD SHELL
Perfect combination: excellent ABS* material and a stabilizing design structure with the additional lid hinge and optimized "base cross" mean the Systainer³ offers a highly rugged design.

SOFT CORE
A Systainer³ doesn't bend easily. Sensitive contents are well protected in the Systainer³.

Impact protection
Padding combination for maximum interior dampening. Even highly breakable goods are fully protected against damage.

Vibration-protected transportation
Every part remains in its place. Perfect-fit lid inserts ensure a solid, secure closure.

Systainer³ S with dividers

Did you know?
systainer® is often used in the medical field.

*ABS = Acrylinitril-Butadien-Styrol

systainer®
The new generation

WITH SYSTAINER I'M WORKING WITH A SYSTEM

Systainer³

VERSATILE

It's not just a case, it's a system! The TANOS portfolio includes not only the innovative systainer® case system, but also an extensive range of practical accessories. From stationary work to transportation to the job site and mobile work directly on site, TANOS offers a wide range of solutions to work even better with a system. No matter how unusual your needs might be, you can rely on our creative product solutions and continuously growing range of innovations.

Stationary work

Perfect storage and work in the workshop with systainer®.

Product selection

Systainer³ BASE-Wall/base support

Drawer "SYS-AZ"

Transportation

Secure your load and protect your health with our mobile accessories range.

Product selection

Systainer³ CART „SYS-RB“

Transport trolley "SYS-ROLL"

Mobile work

Innovative systainer® solutions that allow you to work efficiently, anytime and anywhere.

Product selection

Mobile workshop MW 1000

... and much more.

systainer®
Mobile Workshop

FLEXIBLE AND MOBILE ON THE GO

As the manufacturer behind the systainer® connectable storage system – which has sold millions of units to date – we always have our eye on the latest trends. Today, flexibility and mobility are central facets of everyday work for most tradespeople. Our mobile workshop offers the flexibility you need, ensuring it is ready to use for any application. Compact, comfortable, and with maximum portability, the mobile workshop can be set up anywhere you need it. That's efficiency that pays off!

PLUS X AWARD
2020/2021 | Achieved for:
High Quality
Ease of Use
Functionality
www.plusxaward.com

SAFE
- Safely attach work surface to the cart for transportation using the integrated strap

MULTIFUNCTIONAL
- Flexible clamping mounts on all sides
- Can be connected to additional work tables (TSB/1-MW 1000) on all sides
- Even, stable and consistent work surface

EASY TO USE
- Simple to handle and transport, even on your own

STURDY
- Adjustable feet
- Cart stands on four feet – not on the rollers

Robust: Trolley and wheels easily handle uneven surfaces

Independent: The mobile workshop is ready to use whenever and wherever you need it

Sturdy: The stable construction ensures optimal working conditions anywhere

Ready to go! Quick storage and everything in place for the next job site

PRACTICAL
- Easily load into a vehicle with sliding surfaces on the handle

FLEXIBLE
- Integrated MDF work surface for safely attaching additional systainer® (suitable for all systainer® generations.)

INTUITIVE
- Three different position settings – locks automatically

ORGANIZED
- Stable drawer (SYS-AZ-MW 1000)
- Perfect fit for mounting systainer® with base area of W 396 x D 296 mm
- Custom fitting with drawers
- Variable height adjustment without tools

STURDY
- Large rubber wheels, 200 mm diameter for easily climbing stairs, without gravel residue or visible wear to floors

CLEVER
- Storage for MINI-systainer® T-Loc I or Systainer³ S in the base tray
- Additional drawer can be retrofitted (SYS-AZ art. no. 80101664)

RELIABLE
- T-Loc catch to attach the systainer® to the mobile workshop

systainer®
Product range

OUR PRODUCT RANGE

EMPTY-**systainer**®, SETS AND INSERTS

systainer® dimensions	Page 34 - 35
Systainer³ M	Page 36 - 47
Systainer³ L	Page 48 - 53
Systainer³ XXL	Page 54 - 55
Systainer³ Organizer	Page 56 - 59
Systainer³ ToolBox	Page 60 - 61
Systainer³ lid compartment M	Page 62 - 63
Systainer³ Combi M, Sortainer M, Rack M	Page 64 - 69
Systainer³ S	Page 70 - 73
Systainer³ ToolBag	Page 74 - 75
systainer® Storage-Box	Page 76 - 77

systainer® ADDITIONS AND ACCESSORIES

Labelling	Page 78
Safety, Systainer³ XXS	Page 79
Mobile work	Page 80 - 82
Stationary work	Page 83
Spares	Page 84 - 87

Detailed product information can be found under www.TANOS.de

systainer®
Empty-systainer®

SYSTAINER® DIMENSIONS

Sizes from XXS to XXL! Well-conceived and perfectly matched dimensions make it easy for you to adapt our systainer® optimally to your requirements to save space.

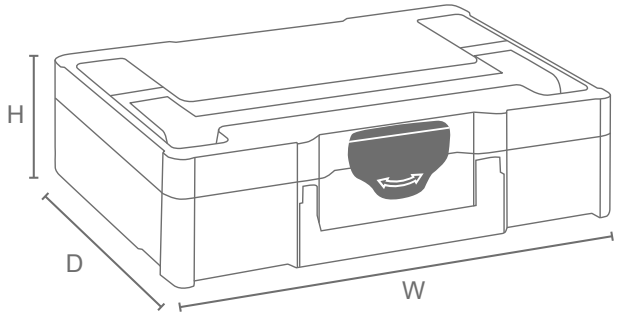

Systainer³

1)

2)

3)

4)

5)

6)

	Outside in mm	Inside in mm	Weight	Inner volume	Pallet Pcs. / H.
Systainer³ M 112 1)	H* 105 x W 396 x D 296	H 71 x W 389.5 x D 275	1.40 kg	7.7 l	128 / 183.7 cm
Systainer³ M 137 2)	H* 130 x W 396 x D 296	H 96 x W 389.5 x D 275	1.50 kg	10.4 l	104 / 184.7 cm
Systainer³ M 187 3)	H* 180 x W 396 x D 296	H 146 x W 389.7 x D 275.2	1.69 kg	15.9 l	72 / 177.7 cm
Systainer³ M 237 4)	H* 230 x W 396 x D 296	H 196 x W 389.7 x D 275.2	1.89 kg	21.4 l	56 / 176.7 cm
Systainer³ M 337 5)	H* 330 x W 396 x D 296	H 296 x W 389.7 x D 275.2	2.35 kg	32.4 l	40 / 180.7 cm
Systainer³ M 437 6)	H* 430 x W 396 x D 296	H 394 x W 389.7 x D 275.2	2.89 kg	43.1 l	32 / 187.7 cm

7)

8)

9)

	Outside in mm	Inside in mm	Weight	Inner volume	Pallet Pcs. / H.
Systainer³ L 137 7)	H* 130 x W 508 x D 296	H 94 x W 501.5 x D 275.2	1.92 kg	13.2 l	52 / 184.7 cm
Systainer³ L 187 8)	H* 180 x W 508 x D 296	H 144 x W 501.7 x D 275.2	2.14 kg	20.2 l	36 / 177.7 cm
Systainer³ L 237 9)	H* 230 x W 508 x D 296	H 194 x W 501.7 x D 275.2	2.38 kg	27.4 l	28 / 176.7 cm

10)

11)

	Outside in mm	Inside in mm	Weight	Inner volume	Pallet Pcs. / H.
Systainer³ XXL 237 10)	H* 230 x W 792 x D 296	H 188 x W 786.5 x D 279.1	3.64 kg	42.3 l	28 / 176.7 cm
Systainer³ XXL 337 11)	H* 330 x W 792 x D 296	H 288 x W 786.1 x D 279.1	4.33 kg	64.2 l	20 / 180.7 cm

12)

13)

	Outside in mm	Inside in mm	Weight	Inner volume	Pallet Pcs. / H.
Systainer³ Organizer M 89 12)	H* 82 x W 396 x D 296	H 60 x W 389.5 x D 246.2	1.60 kg	7.4 l	160 / 183.7 cm
Systainer³ Organizer L 89 13)	H* 82 x W 508 x D 296	H 60 x W 501.5 x D 278.5	1.99 kg	9.7 l	80 / 183.7 cm

14)

15)

16)

17)

	Outside in mm	Inside in mm	Weight	Inner volume	Pallet Pcs. / H.
Systainer³ ToolBox M 137 14)	H* 130 x W 396 x D 296	H 122 x W 357.8 x D 221	1.30 kg	10.4 l	104 / 184.7 cm
Systainer³ ToolBox M 237 15)	H* 230 x W 396 x D 296	H 222 x W 357.8 x D 221	1.70 kg	21.4 l	56 / 176.7 cm
Systainer³ ToolBox L 137 16)	H* 130 x W 508 x D 296	H 120 x W 461.1 x D 221	1.90 kg	13.2 l	52 / 184.7 cm
Systainer³ ToolBox L 237 17)	H* 230 x W 508 x D 296	H 220 x W 461.1 x D 221	2.40 kg	27.4 l	28 / 176.7 cm

18)

19)

20)

	Outside in mm	Inside in mm	Weight	Inner Volume	Pallet Pcs. / H.
Systainer³ lid compartment M 137 18)	H* 130 x W 396 x D 296	H 96 x W 389.5 x D 275	1.70 kg	10.4 l	104 / 184.7 cm
Systainer³ lid compartment M 187 19)	H* 180 x W 396 x D 296	H 146 x W 389.7 x D 275.2	1.90 kg	15.9 l	72 / 177.7 cm
Systainer³ lid compartment M 237 20)	H* 230 x W 396 x D 296	H 196 x W 389.7 x D 275.2	2.10 kg	21.4 l	56 / 176.7 cm

21)

22)

	Outside in mm	Inside in mm	Weight	Inner Volume	Pallet Pcs. / H.
Systainer³ Combi M 287 21)	H* 280 x W 396 x D 296	H 140 x W 389 x D 287	3.56 kg	–	48 / 183.7 cm
Drawer	–	H 66 x W 343 x D 271	–	–	–
Systainer³ Combi M 337 22)	H* 330 x W 396 x D 296	H 190 x W 389 x D 287	3.72 kg	–	40 / 180.7 cm
Drawer	–	H 66 x W 343 x D 271	–	–	–

23)

24)

	Outside in mm	Inside in mm	Weight	Inner Volume	Pallet Pcs. / H.
Systainer³ Sortainer/2 M 337 23)	H* 330 x W 396 x D 296	–	5.18 kg	–	40 / 180.7 cm
Small drawer	–	H 66 x W 343 x D 271	–	–	–
High drawer	–	H 158 x W 343 x D 261	–	–	–
Systainer³ Sortainer/3 M 337 24)	H* 330 x W 396 x D 296		6.22 kg	–	40 / 180.7 cm
Drawer	–	H 66 x W 343 x D 271	–	–	–

25)

26)

	Outside in mm	Inside in mm	Weight	Inner Volume	Pallet Pcs. / H.
Systainer³ Rack/0 M 337 25)	H* 330 x W 396 x D 296	–	4.06 kg	–	40 / 180.7 cm
Systainer³ Rack/6 M 337 26)	H* 330 x W 396 x D 296	–	7.05 kg	–	40 / 180.7 cm

27)

28)

29)

	Outside in mm	Inside in mm	Weight	Inner Volume	Pallet Pcs. / H.
Systainer³ S 76 27)	H* 71 x W 265 x D 171	H 67 x W 258 x D 164	0.43 kg	3.2 l	400 / 200 cm
Systainer³ S 76 transparent lid 28)	H* 71 x W 265 x D 171	H 67 x W 258 x D 164	0.46 kg	3.2 l	400 / 200 cm
Systainer³ S 147 29)	H* 142 x W 265 x D 171	H 138 x W 258 x D 164	0.58 kg	5.8 l	192 / 195 cm

30)

	Outside in mm	Inside in mm	Weight	Inner Volume	Pallet Pcs. / H.
Systainer³ Toolbag M 30)	H* 359 x W 396 x D 296	–	3.68 kg	–	24 / 168.4 cm

T-Loc / Classic-Line**

31)

	Outside in mm	Inside in mm	Weight	Pallet Pcs. / H.
systainer® Storage-Box 1)	H* 160 x W 396 x D 296 Height with handle*: 233	-	2.50 kg	88 / 196 cm

*The outside dimensions are measured without feet: Systainer³ M, L, XXL, Systainer³ Organizer M + L, Systainer³ lid compartment M, Systainer³ Combi M, Systainer³ Sortainer M, Systainer³ Rack, Systainer³ ToolBox M + L: H +7 mm; Systainer³ S 76 + 146: H +5 mm ** Not equipped with an integrated vehicle mount for bott vario3

systainer®
Empty-systainer®

Systainer³ M 112

Small and functional! Thanks to its low height, for example, it is an excellent way to store abrasive material. The Systainer³ M 112 can be conveniently transported upright with its front handle.

Systainer³ M 112
- Light grey art n° 83000001
- Anthracite art n° 83000018

DIMENSIONS

Outside in mm	Inside in mm	Weight	Carrying capacity	Inner volume	Pallet Pcs. / H.
H* 105 x W 396 x D 296	H 71 x W 389.5 x D 275	1.40 kg	20 kg	7.7 l	128 / 183.7 cm

*The outside dimensions are measured without feet: H + 7 mm

COLOR

	Standard colors		Additional colors									
Body with lid	1)	3)		4)	5)	6)	7)	8)	9)	10)		
Lid handle											11)	12)
Catch	2)		1)									

1) RAL 7035, light grey
2) HKS 43 K, signal blue
3) RAL 7016, anthracite
4) RAL 9004, black
5) RAL 1007, daffodil yellow
6) RAL 2011, deep orange
7) RAL 3002, carmine red
8) RAL 5015, sky blue
9) RAL 5003, sapphire blue
10) RAL 6001, emerald green
11) HKS 54 K, signal green
12) RAL 9016, white

Systainer³ M 112 SETS

Universal-Systainer³ M 112
- Light grey art n° 83500009
- Anthracite art n° 83500010
- With lid insert, EPP, 5 mm and universal insert with 10 compartments

Abrasive material Systainer³ M 112
- Light grey art n° 83500013
- Anthracite art n° 83500014
- With insert for abrasives Ø 125 mm, 80 x 133 mm and Delta 100 x 150 mm

LID INSERTS

Lid insert M, EPP, 5 mm
- Art n° 83000044

Lid foam M, vaulted
- Art n° 83000035 (Industry customers*)
- Art n° 83570006 (Dealers/end users**)

Office lid
- Art n° 83500069

BOTTOM INSERTS

Base foam M, soft, 25 mm
- Art n° 83000036 (Industry customers*)
- Art n° 83570007 (Dealers/end users**)

Pick & pluck foam M, rigid, 25 mm
- Art n° 83000038 (Industry customers*)
- Art n° 83570009 (Dealers/end users**)

Perforated cubes, 15 x 15 mm, for quarrying out

Base foam with cross cut-out
- Art n° 83000037
- (Industry customers*)
- Art n° 83570008 (Dealers/end users**)

Universal insert with 10 compartments
- Art n° 83000052

Insert for abrasives Ø 125 mm, 80 x 133 mm and Delta 100 x 150 mm
- Art n° 83000056

*Valid for industry customers. Unpacked in units **Valid for dealers and end users, packed individually

systainer®
Empty-systainer®

Systainer³ M 137

Handy and mobile! The Systainer³ M 137 can not only be perfectly integrated into a vehicle equipment, it is also easy to remove and transport using the front handle.

Systainer³ M 137
- Light grey art n° 83000002
- Anthracite art n° 83000019

DIMENSIONS

Outside in mm	Inside in mm	Weight	Carrying capacity	Inner volume	Pallet Pcs. / H.
H* 130 x W 396 x D 296	H 96 x W 389.5 x D 275	1.50 kg	20 kg	10.4 l	104 / 184.7 cm

*The outside dimensions are measured without feet: H + 7 mm

COLORS

	Standard colors		Additional colors										
Body with lid	1)	3)		4)	5)	6)	7)	8)	9)	10)			
Lid handle												11)	12)
Catch	2)		1)										

1) RAL 7035, light grey
2) HKS 43 K, signal blue
3) RAL 7016, anthracite
4) RAL 9004, black
5) RAL 1007, daffodil yellow
6) RAL 2011, deep orange
7) RAL 3002, carmine red
8) RAL 5015, sky blue
9) RAL 5003, sapphire blue
10) RAL 6001, emerald green
11) HKS 54 K, signal green
12) RAL 9016, white

Systainer³ M 137 SETS

Padded-Systainer³ M 137
- Light grey art n° 83500015
- Anthracite art n° 83500016
- With base foam soft, 25 mm, base pick & pluck foam rigid, 25 mm and lid foam, vaulted

Cordless drill Systainer³ M 137
- Light grey art n° 83500011
- Anthracite art n° 83500012
- With insert for cordless drill and lid foam, vaulted

LID INSERTS

Lid insert M, EPP, 5 mm
- Art n° 83000044

Lid foam M, vaulted
- Art n° 83000035 (Industry customers*)
- Art n° 83570006 (Dealers/end users**)

Office lid
- Art n° 83500069

BOTTOM INSERTS

Base foam M, soft, 25 mm
- Art n° 83000036 (Industry customers*)
- Art n° 83570007 (Dealers/end users**)

Pick & pluck foam M, rigid, 25 mm
- Art n° 83000038 (Industry customers*)
- Art n° 83570009 (Dealers/end users**)

Perforated cubes, 15 x 15 mm, for quarrying out

Base foam with cross cut-out
- Art n° 83000037
- (Industry customers*)
- Art n° 83570008 (Dealers/end users**)

Insert for cordless drill
- Art n° 83000053

*Valid for industry customers. Unpacked in units **Valid for dealers and end users, packed individually

systainer®
Empty-systainer®

Systainer³ M 187

With its compact dimensions, the Systainer³ M 187 adapts to your individual equipment needs. The Systainer³ M 187 is especially well suited for power tools or office materials. Upright carrying option included with the front handle.

Systainer³ M 187
- Light grey art n° 83000003
- Anthracite art n° 83000020

DIMENSIONS

Outside in mm	Inside in mm	Weight	Carrying capacity	Inner volume	Pallet Pcs. / H.
H* 180 x W 396 x D 296	H 146 x W 389.7 x D 275.2	1.69 kg	20 kg	15.9 l	72 / 177.7 cm

*The outside dimensions are measured without feet: H + 7 mm

COLORS

	Standard colors		Additional colors										
Body with lid	1)	3)		4)	5)	6)	7)	8)	9)	10)			
Lid handle											11)	12)	
Catch	2)		1)										

1) RAL 7035, light grey
2) HKS 43 K, signal blue
3) RAL 7016, anthracite
4) RAL 9004, black
5) RAL 1007, daffodil yellow
6) RAL 2011, deep orange
7) RAL 3002, carmine red
8) RAL 5015, sky blue
9) RAL 5003, sapphire blue
10) RAL 6001, emerald green
11) HKS 54 K, signal green
12) RAL 9016, white

Systainer³ M 187 SETS

Oscillator-Systainer³ M 187
- Light grey art n° 83500017
- Anthracite art n° 83500018
- With insert for oscillator and lid foam, vaulted

Angle grinder Systainer³ M 187
- Light grey art n° 83500019
- Anthracite art n° 83500020
- With insert for angle grinders Ø 125 mm and lid foam, vaulted

LID INSERTS

Lid insert M, EPP, 5 mm
- Art n° 83000044

Lid foam M, vaulted
- Art n° 83000035 (Industry customers*)
- Art n° 83570006 (Dealers/end users**)

Office lid
- Art n° 83500069

BOTTOM INSERTS

Base foam M, soft, 25 mm
- Art n° 83000036 (Industry customers*)
- Art n° 83570007 (Dealers/end users**)

Pick & pluck foam M, rigid, 25 mm
- Art n° 83000038 (Industry customers*)
- Art n° 83570009 (Dealers/end users**)

Perforated cubes, 15 x 15 mm, for quarrying out

Base foam with cross cut-out
- Art n° 83000037
- (Industry customers*)
- Art n° 83570008 (Dealers/end users**)

Insert for angle grinder Ø 125 mm
- Art n° 83000054

Insert for oscillator
- Art n° 83000055

Foam for fixation for insert for oscillator
- Art n° 83500077

*Valid for industry customers. Unpacked in units **Valid for dealers and end users, packed individually

systainer®
Empty-systainer®

Systainer³ M 237

Optimal storage for tools or insulation for sensitive contents: that's the Systainer³ M 237. The integrated pull-out aid makes it easier to remove the case from a shelf or vehicle.

Systainer³ M 237
- Light grey art n° 83000004
- Anthracite art n° 83000021

DIMENSIONS

Outside in mm	Inside in mm	Weight	Carrying capacity	Inner volume	Pallet Pcs. / H.
H* 230 x W 396 x D 296	H 196 x W 389.7 x D 275.2	1.89 kg	20 kg	21.4 l	56 / 176.7 cm

*The outside dimensions are measured without feet: H + 7 mm

COLORS

	Standard colors		Additional colors									
Body with lid	1)	3)		4)	5)	6)	7)	8)	9)	10)		
Lid handle											11)	12)
Catch	2)		1)									

1) RAL 7035, light grey
2) HKS 43 K, signal blue
3) RAL 7016, anthracite
4) RAL 9004, black
5) RAL 1007, daffodil yellow
6) RAL 2011, deep orange
7) RAL 3002, carmine red
8) RAL 5015, sky blue
9) RAL 5003, sapphire blue
10) RAL 6001, emerald green
11) HKS 54 K, signal green
12) RAL 9016, white

Systainer³ M 237 SETS

Abrasive material
Systainer³ M 237
- Light grey art n° 83500023
- Anthracite art n° 83500024
- With insert for abrasives Ø 150 mm

Insulated
Systainer³ M 237 EPP
- Light grey art n° 83500037
- Anthracite art n° 83500038
- With EPP insulating insert and insulating lid

LID INSERTS

Lid insert M, EPP, 5 mm
- Art n° 83000044

Lid foam M, vaulted
- Art n° 83000035 (Industry customers*)
- Art n° 83570006 (Dealers/end users**)

Office lid
- Art n° 83500069

BOTTOM INSERTS

Base foam M, soft, 25 mm
- Art n° 83000036 (Industry customers*)
- Art n° 83570007 (Dealers/end users**)

Pick & pluck foam M, rigid, 25 mm
- Art n° 83000038 (Industry customers*)
- Art n° 83570009 (Dealers/end users**)

Perforated cubes, 15 x 15 mm, for quarrying out

Base foam with cross cut-out
- Art n° 83000037
- (Industry customers*)
- Art n° 83570008 (Dealers/end users**)

Insert for abrasives Ø 150 mm
- Art n° 83000057

Divider for Insulated Systainer³
- Art n° 83500066
- Set of 2

Set of 3 dividers
- Art n° 83500054

*Valid for industry customers. Unpacked in units **Valid for dealers and end users, packed individually

systainer®
Empty-systainer®

Systainer³ M 337

Flying high with the Systainer³ M 337. With its impressive height, it offers lots of inside space for hand tools and tall materials. It is optimally suited for insulating cartridges, spray cans and sensitive contents.

Systainer³ M 337
- Light grey art n° 83000005
- Anthracite art n° 83000022

DIMENSIONS

Outside in mm	Inside in mm	Weight	Carrying capacity	Inner volume	Pallet Pcs. / H.
H* 330 x W 396 x D 296	H 296 x W 389.7 x D 275.2	2.35 kg	20 kg	32.4 l	40 / 180.7 cm

*The outside dimensions are measured without feet: H + 7 mm

COLORS

	Standard colors		Additional colors									
Body with lid	1)	3)		4)	5)	6)	7)	8)	9)	10)		
Lid handle											11)	12)
Catch	2)		1)									

1) RAL 7035, light grey
2) HKS 43 K, signal blue
3) RAL 7016, anthracite
4) RAL 9004, black
5) RAL 1007, daffodil yellow
6) RAL 2011, deep orange
7) RAL 3002, carmine red
8) RAL 5015, sky blue
9) RAL 5003, sapphire blue
10) RAL 6001, emerald green
11) HKS 54 K, signal green
12) RAL 9016, white

Systainer³ M 337 SETS

Cartridge-Systainer³ M 337***
- Light grey art n° 83500027
- Anthracite art n° 83500028
- With EPP cartridge insert

Aerosol-Systainer³ M 337****
- Light grey art n° 83500031
- Anthracite art n° 83500032
- With EPP spray can insert

Insulated Systainer³ M 337 EPP
- Light grey art n° 83500039
- Anthracite art n° 83500040
- With EPP insulating insert and insulating lid

LID INSERTS

Lid insert M, EPP, 5 mm
- Art n° 83000044

Lid foam M, vaulted
- Art n° 83000035 (Industry customers*)
- Art n° 83570006 (Dealers/end users**)

Office lid
- Art n° 83500069

BOTTOM INSERTS

Base foam M, soft, 25 mm
- Art n° 83000036 (Industry customers*)
- Art n° 83570007 (Dealers/end users**)

Pick & pluck foam M, rigid, 25 mm
- Art n° 83000038 (Industry customers*)
- Art n° 83570009 (Dealers/end users**)

Perforated cubes, 15 x 15 mm, for quarrying out

Base foam with cross cut-out
- Art n° 83000037
- (Industry customers*)
- Art n° 83570008 (Dealers/end users**)

EPP cartridge insert***
- Art n° 83000046

EPP spray can insert****
- Art n° 83000047

Divider for Insulated Systainer³
- Art n° 83500066
- Set of 2

*Valid for industry customers. Unpacked in units **Valid for dealers and end users, packed individually
***Max. 22 cartridges and 15 cartridge-tops ****Max. 14 spray cans

systainer®
Empty-systainer®

Systainer³ M 437

Tall, taller, Systainer³ M 437. The tallest Systainer³ offers plenty of space for large work materials and tools, and is optimally suited for insulating cartridges, spray cans and sensitive contents or packaging large objects.

Systainer³ M 437
- Light grey art n° 83000006
- Anthracite art n° 83000023

DIMENSIONS

Outside in mm	Inside in mm	Weight	Carrying capacity	Inner volume	Pallet Pcs. / H.
H* 430 x W 396 x D 296	H 394 x W 389.7 x D 275.2	2.89 kg	20 kg	43.1 l	32 / 187.7 cm

*The outside dimensions are measured without feet: H + 7 mm

COLORS

	Standard colors		Additional colors										
Body with lid	1)	3)		4)	5)	6)	7)	8)	9)	10)			
Lid handle											11)	12)	
Catch	2)		1)										

1) RAL 7035, light grey
2) HKS 43 K, signal blue
3) RAL 7016, anthracite
4) RAL 9004, black
5) RAL 1007, daffodil yellow
6) RAL 2011, deep orange
7) RAL 3002, carmine red
8) RAL 5015, sky blue
9) RAL 5003, sapphire blue
10) RAL 6001, emerald green
11) HKS 54 K, signal green
12) RAL 9016, white

Systainer³ M 437 SETS

Cartridge-Systainer³ M 437***
- Light grey art n° 83500029
- Anthracite art n° 83500030
- With EPP cartridge insert

Aerosol-Systainer³ M 437****
- Light grey art n° 83500033
- Anthracite art n° 83500034
- With EPP spray can insert

Insulated Systainer³ M 437 EPP
- Light grey art n° 83500041
- Anthracite art n° 83500042
- With EPP insulating insert and insulating lid

LID INSERTS

Lid insert M, EPP, 5 mm
- Art n° 83000044

Lid foam M, vaulted
- Art n° 83000035 (Industry customers*)
- Art n° 83570006 (Dealers/end users**)

Office lid
- Art n° 83500069

BOTTOM INSERTS

Base foam M, soft, 25 mm
- Art n° 83000036 (Industry customers*)
- Art n° 83570007 (Dealers/end users**)

Pick & pluck foam M, rigid, 25 mm
- Art n° 83000038 (Industry customers*)
- Art n° 83570009 (Dealers/end users**)

Perforated cubes, 15 x 15 mm, for quarrying out

Base foam with cross cut-out
- Art n° 83000037
- (Industry customers*)
- Art n° 83570008 (Dealers/end users**)

EPP cartridge insert***
- Art n° 83000046

EPP spray can insert****
- Art n° 83000047

Divider for Insulated Systainer³
- Art n° 83500066
- Set of 2

*Valid for industry customers. Unpacked in units **Valid for dealers and end users, packed individually
***Max. 22 cartridges and 15 cartridge-tops ****Max. 14 spray cans

systainer®
Empty-systainer®

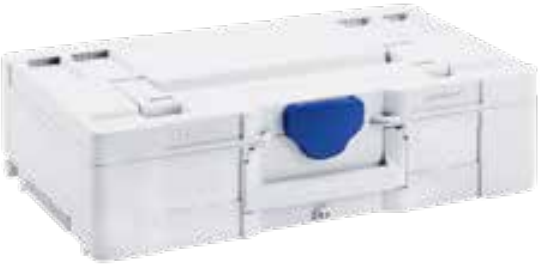

Systainer³ L 137

If you need a little extra storage space: Systainer³ L 137. The Systainer³ L 137 offers the best possible tool storage for your needs, as well as convenient carrying upright using the front handle.

Systainer³ L 137
- Light grey art n° 83000007
- Anthracite art n° 83000024

DIMENSIONS

Outside in mm	Inside in mm	Weight	Carrying capacity	Inner volume	Pallet Pcs. / H.
H* 130 x W 508 x D 296	H 94 x W 501.5 x D 275.2	1.92 kg	20 kg	13.2 l	52 / 184.7 cm

*The outside dimensions are measured without feet: H + 7 mm

COLORS

	Standard colors	Additional colors
Body with lid	1) 3)	Additional colors upon request
Lid handle		4) 5) 6) 7) 8) 9) 10) 11) 12)
Catch	2)	1)

1) RAL 7035, light grey
2) HKS 43 K, signal blue
3) RAL 7016, anthracite
4) RAL 9004, black
5) RAL 1007, daffodil yellow
6) RAL 2011, deep orange
7) RAL 3002, carmine red
8) RAL 5015, sky blue
9) RAL 5003, sapphire blue
10) RAL 6001, emerald green
11) HKS 54 K, signal green
12) RAL 9016, white

Systainer³ L 137 SETS

Universal-Systainer³ L 137
- Light grey art n° 83500043
- Anthracite art n° 83500044
- With lid insert, EPP, 5 mm and universal insert with 6 compartments

Padded-Systainer³ L 137
- Light grey art n° 83500045
- Anthracite art n° 83500046
- With base foam soft, 25 mm, base pick & pluck foam rigid, 25 mm, and lid foam, vaulted

LID INSERTS

Lid insert L, EPP, 5 mm
- Art n° 83000045

Lid foam L, vaulted
- Art n° 83000040 (Industry customers*)
- Art n° 83570010 (Dealers/end users**)

Tool lid
- Art n° 83500070

BOTTOM INSERTS

Base foam L, soft, 25 mm
- Art n° 83000041 (Industry customers*)
- Art n° 83570011 (Dealers/end users**)

Pick & pluck foam L, rigid, 25 mm
- Art n° 83000043 (Industry customers*)
- Art n° 83570012 (Dealers/end users**)

Perforated cubes, 15 x 15 mm, for quarrying out

EPP base insert, 15 mm
- Art n° 83000042

Universal insert L, with 6 compartments
- Art n° 83000058

*Valid for industry customers. Unpacked in units **Valid for dealers and end users, packed individually

systainer®
Empty-systainer®

Systainer³ L 187

Tools, angle grinders and much more, everything has its place in the Systainer³ L 187. Carry upright or easily link to a tower; transportation is easy with the Systainer³ L 187.

Systainer³ L 187
- Light grey art n° 83000008
- Anthracite art n° 83000025

DIMENSIONS

Outside in mm	Inside in mm	Weight	Carrying capacity	Inner volume	Pallet Pcs. / H.
H* 180 x W 508 x D 296	H 144 x W 501.7 x D 275.2	2.14 kg	20 kg	20.2 l	36 / 177.7 cm

*The outside dimensions are measured without feet: H + 7 mm

COLORS

	Standard colors	Additional colors
Body with lid	1) 3)	Additional colors upon request
Lid handle		4) 5) 6) 7) 8) 9) 10) 11) 12)
Catch	2)	1)

1) RAL 7035, light grey
2) HKS 43 K, signal blue
3) RAL 7016, anthracite
4) RAL 9004, black
5) RAL 1007, daffodil yellow
6) RAL 2011, deep orange
7) RAL 3002, carmine red
8) RAL 5015, sky blue
9) RAL 5003, sapphire blue
10) RAL 6001, emerald green
11) HKS 54 K, signal green
12) RAL 9016, white

Systainer³ L 187 SETS

Tool-Systainer³ L 187
- Light grey art n° 83500047
- Anthracite art n° 83500048
- With 2 tool lids and tool insert with dividers

LID INSERTS

Lid insert L, EPP, 5 mm
- Art n° 83000045

Lid foam L, vaulted
- Art n° 83000040 (Industry customers*)
- Art n° 83570010 (Dealers/end users**)

Tool lid
- Art n° 83500070

BOTTOM INSERTS

Base foam L, soft, 25 mm
- Art n° 83000041 (Industry customers*)
- Art n° 83570011 (Dealers/end users**)

Pick & pluck foam L, rigid, 25 mm
- Art n° 83000043 (Industry customers*)
- Art n° 83570012 (Dealers/end users**)

Perforated cubes, 15 x 15 mm, for quarrying out

EPP base insert, 15 mm
- Art n° 83000042

Divider-set for tool insert
- Art n° 83500154
- For Tool-Systainer³ L 187
- 1 x short and 1 x long divider

*Valid for industry customers. Unpacked in units **Valid for dealers and end users, packed individually

systainer®
Empty-systainer®

Systainer³ L 237

The Systainer³ L 237 offers additional space. Large equipment or utensils fit into this tool case. Just like all Systainer³ L sizes, it can also be linked to the Systainer³ M size and systainer® T-Loc.

Systainer³ L 237
- Light grey art n° 83000009
- Anthracite art n° 83000026

DIMENSIONS

Outside in mm	Inside in mm	Weight	Carrying capacity	Inner volume	Pallet Pcs. / H.
H* 230 x W 508 x D 296	H 194 x W 501.7 x D 275.2	2.38 kg	20 kg	27.4 l	28 / 176.7 cm

*The outside dimensions are measured without feet: H + 7 mm

COLORS

	Standard colors	Additional colors
Body with lid	1) 3)	Additional colors upon request
Lid handle		4) 5) 6) 7) 8) 9) 10) 11) 12)
Catch	2)	1)

1) RAL 7035, light grey
2) HKS 43 K, signal blue
3) RAL 7016, anthracite
4) RAL 9004, black
5) RAL 1007, daffodil yellow
6) RAL 2011, deep orange
7) RAL 3002, carmine red
8) RAL 5015, sky blue
9) RAL 5003, sapphire blue
10) RAL 6001, emerald green
11) HKS 54 K, signal green
12) RAL 9016, white

LID INSERTS

Lid insert L, EPP, 5 mm
- Art n° 83000045

Lid foam L, vaulted
- Art n° 83000040 (Industry customers*)
- Art n° 83570010 (Dealers/end users**)

Tool lid
- Art n° 83500070

BOTTOM INSERTS

Base foam L, soft, 25 mm
- Art n° 83000041 (Industry customers*)
- Art n° 83570011 (Dealers/end users**)

Pick & pluck foam L, rigid, 25 mm
- Art n° 83000043 (Industry customers*)
- Art n° 83570012 (Dealers/end users**)

Perforated cubes, 15 x 15 mm, for quarrying out

EPP base insert, 15 mm
- Art n° 83000042

*Valid for industry customers. Unpacked in units **Valid for dealers and end users, packed individually

systainer®
Empty-systainer®

1)

2)

Systainer³ XXL 237 + 337

Bigger, better, stronger! The Systainer³ with plenty of space and volume. The essential choice for bulky items and large materials or tools: Systainer³ XXL 237 and 337.

Systainer³ XXL 237 1)
- Light grey art n° 83000016
- Anthracite art n° 83000033

Systainer³ XXL 337 2)
- Light grey art n° 83000017
- Anthracite art n° 83000034

DIMENSIONS

Systainer³ XXL 237

Outside in mm	Inside in mm	Weight	Carrying capacity	Inner volume	Pallet Pcs. / H.
H* 230 x W 792 x D 296	H 188 x W 786.5 x D 279.1	3.64 kg	40 kg	42.3 l	28 / 176.7 cm

Systainer³ XXL 337

Outside in mm	Inside in mm	Weight	Carrying capacity	Inner volume	Pallet Pcs. / H.
H* 330 x W 792 x D 296	H 288 x W 786.1 x D 279.1	4.33 kg	40 kg	64.2 l	20 / 180.7 cm

*The outside dimensions are measured without feet: H + 7 mm

COLORS

	Standard colors	Additional colors
Body with lid	1) 3)	Additional colors upon request
Lid handle		4) 5) 6) 7) 8) 9) 10) 11) 12)
Catch	2)	1)

1) RAL 7035, light grey
2) HKS 43 K, signal blue
3) RAL 7016, anthracite
4) RAL 9004, black
5) RAL 1007, daffodil yellow
6) RAL 2011, deep orange
7) RAL 3002, carmine red
8) RAL 5015, sky blue
9) RAL 5003, sapphire blue
10) RAL 6001, emerald green
11) HKS 54 K, signal green
12) RAL 9016, white

LID INSERTS

Lid foam XXL, vaulted
- Art n° 83000066 (Industry customers*)
- Art n° 83570013 (Dealers/end users**)

BOTTOM INSERTS

Base foam XXL, soft, 25 mm
- Art n° 83000067 (Industry customers*)
- Art n° 83570014 (Dealers/end users**)

Pick & pluck foamXXL, rigid, 50 mm***
- Art n° 83000068 (Industry customers*)
- Art n° 83570015 (Dealers/end users**)

Mounting Plate
- Art n° 83500274
- incl. hook and loop fastener 3 m and fastening material

Proven
T-Loc
central controller

Interfaces
to Systainer³ M + L
and systainer® T-Loc

Secure
the Systainer³
using an integrated
latch (Theft Tag)

Carry
the Systainer³ by using the late-
ral integrated grip recess

Transport
the case using the Systainer³
CART “SYS-RB” roller board

Label
the Systainer³ with two slots
for custom labeling

*Valid for industry customers. Unpacked in units **Valid for dealers and end users, packed individually ***Perforated cubes, 15 x 15 mm, for quarrying out

systainer®
Empty-systainer®

Systainer³ ORGANIZER M 89

For fans of structure: Small parts sorting for professionals. With Systainer³ Organizer M 89, every small consumable material has its place and is clearly sorted. Already fitted with insert boxes or customized, it is your choice.

Systainer³ Organizer M 89
- Light grey art n° 83000010
- Anthracite art n° 83000027

DIMENSIONS

Outside in mm	Inside in mm	Weight	Carrying capacity	Inner volume	Pallet Pcs. / H.
H* 82 x W 396 x D 296	H 60 x W 389.5 x D 246.2	1.60 kg	20 kg	7.4 l	160 / 183.7 cm

*The outside dimensions are measured without feet: H + 7 mm

COLORS

	Standard colors	Additional colors
Body without lid	1) 3)	Additional colors upon request
Catch	2)	1) 4) 5) 6) 7) 8) 9) 10) 11) 12)

1) RAL 7035, light grey
2) HKS 43 K, signal blue
3) RAL 7016, anthracite
4) RAL 9004, black
5) RAL 1007, daffodil yellow
6) RAL 2011, deep orange
7) RAL 3002, carmine red
8) RAL 5015, sky blue
9) RAL 5003, sapphire blue
10) RAL 6001, emerald green
11) HKS 54 K, signal green
12) RAL 9016, white

Systainer³ ORGANIZER M 89 SETS

Systainer³ Organizer M 89 with 22 insert boxes
- Light grey art n° 83500001
- Anthracite art n° 83500005
- Insert boxes:
  13 pcs. 50 x 50,
  8 pcs. 50 x 100,
  1 pc. 100 x 150

Systainer³ Organizer M 89 with 6 insert boxes
- Light grey art n° 83500002
- Anthracite art n° 83500006
- Insert boxes:
  1 pc. 50 x 50,
  1 pc. 50 x 100,
  3 pcs. 100 x 150,
  1 pc. 100 x 350

BOTTOM INSERTS

Insert box set 50 x 50
- Art n° 83500055
- Set of 10
  D 50 x W 50 x H 68 mm

Insert box set 50 x 100
- Art n° 83500056
- Set of 10
  D 50 x W 100 x H 68 mm

Insert box set 100 x 100
- Art n° 83500057
- Set of 6
  D 100 x W 100 x H 68 mm

Insert box set 100 x 150
- Art n° 83500058
- Set of 6
  D 100 x W 150 x H 68 mm

Insert box set 100 x 350
- Art n° 83500059
- Set of 2
  D 100 x W 350 x H 68 mm

Insert box set 150 x 150
- Art n° 83500060
- Set of 6
  D 150 x W 150 x H 68 mm

Insert box set 150 x 300
- Art n° 83500061
- Set of 2
  D 150 x W 300 x H 68 mm

systainer®
Empty-systainer®

Systainer³ ORGANIZER L 89

The Systainer³ Organizer L 89 for even better sorting. The case also organizes a broad range of consumable materials like screws and dowels. Everything is clearly sorted, and the transparent lid allows you to keep your perspective, even with the lid closed.

Systainer³ Organizer L 89
- Light grey art n° 83000011
- Anthracite art n° 83000028

DIMENSIONS

Outside in mm	Inside in mm	Weight	Carrying capacity	Inner volume	Pallet Pcs. / H.
H* 82 x W 508 x D 296	H 60 x W 501.5 x D 278.5	1.99 kg	20 kg	9.7 l	80 / 183.7 cm

*The outside dimensions are measured without feet: H + 7 mm

COLORS

	Standard colors	Additional colors
Body without lid	1) 3)	Additional colors upon request
Catch	2)	1) 4) 5) 6) 7) 8) 9) 10) 11) 12)

1) RAL 7035, light grey
2) HKS 43 K, signal blue
3) RAL 7016, anthracite
4) RAL 9004, black
5) RAL 1007, daffodil yellow
6) RAL 2011, deep orange
7) RAL 3002, carmine red
8) RAL 5015, sky blue
9) RAL 5003, sapphire blue
10) RAL 6001, emerald green
11) HKS 54 K, signal green
12) RAL 9016, white

Systainer³ ORGANIZER L 89 SETS

Systainer³ Organizer L 89 with 20 insert boxes
- Light grey art n° 83500003
- Anthracite art n° 83500007
- Insert boxes:
  10 pcs. 50 x 50,
  6 pcs. 50 x 100,
  2 pcs. 100 x 100,
  1 pc. 100 x 150,
  1 pc. 150 x 150

Systainer³ Organizer L 89 with 10 insert boxes
- Light grey art n° 83500004
- Anthracite art n° 83500008
- Insert boxes:
  1 pc. 50 x 50,
  4 pcs. 50 x 100,
  1 pc. 100 x 100,
  3 pcs. 100 x 150,
  1 pc. 100 x 350

BOTTOM INSERTS

Insert box set 50 x 50
- Art n° 83500055
- Set of 10
  D 50 x W 50 x H 68 mm

Insert box set 50 x 100
- Art n° 83500056
- Set of 10
  D 50 x W 100 x H 68 mm

Insert box set 100 x 100
- Art n° 83500057
- Set of 6
  D 100 x W 100 x H 68 mm

Insert box set 100 x 150
- Art n° 83500058
- Set of 6
  D 100 x W 150 x H 68 mm

Insert box set 100 x 350
- Art n° 83500059
- Set of 2
  D 100 x W 350 x H 68 mm

Insert box set 150 x 150
- Art n° 83500060
- Set of 6
  D 150 x W 150 x H 68 mm

Insert box set 150 x 300
- Art n° 83500061
- Set of 2
  D 150 x W 300 x H 68 mm

systainer®
Empty-systainer®

1)

2)

3)

Systainer³ TOOLBOX

Everything is ready to hand in the Systainer³ ToolBox! The convertible version of the Systainer³ system with plenty of storage capacity for tools, working material and accessories. Thanks to the movable carrying handle and the Systainer³ closing catch, Systainer³ can be linked with just one flick of the wrist. It can be connected to all Systainer³ and systainer® T-Loc and integrated into van racking equipment, this makes the ToolBox the perfect companion at work.

Systainer³ ToolBox M 137 1)
- Light grey art n° 83000012
- Anthracite art n° 83000029

Systainer³ ToolBox M 237 2)
- Light grey art n° 83000013
- Anthracite art n° 83000030

Systainer³ ToolBox L 137 3)
- Light grey art n° 83000014
- Anthracite art n° 83000031

Systainer³ ToolBox L 237 4)
- Light grey art n° 83000015
- Anthracite art n° 83000032

4)

DIMENSIONS

Systainer³ ToolBox M 137

Outside in mm	Inside in mm	Weight	Carrying capacity	Inner volume	Pallet Pcs. / H.
H* 130 x W 396 x D 296	H 122 x W 357.8 x D 221	1.30 kg	20 kg	10.4 l	104 / 184.7 cm

Systainer³ ToolBox M 237

Outside in mm	Inside in mm	Weight	Carrying capacity	Inner volume	Pallet Pcs. / H.
H* 230 x W 396 x D 296	H 222 x W 357.8 x D 221	1.70 kg	20 kg	21.4 l	56 / 176.7 cm

Systainer³ ToolBox L 137

Outside in mm	Inside in mm	Weight	Carrying capacity	Inner volume	Pallet Pcs. / H.
H* 130 x W 508 x D 296	H 120 x W 461.1 x D 221	1.90 kg	20 kg	13.2 l	52 / 184.7 cm

Systainer³ ToolBox L 237

Outside in mm	Inside in mm	Weight	Carrying capacity	Inner volume	Pallet Pcs. / H.
H* 230 x W 508 x D 296	H 220 x W 461.1 x D 221	2.40 kg	20 kg	27.4 l	28 / 176.7 cm

*The outside dimensions are measured without feet: H + 7 mm

COLORS

	Standard colors	Additional colors
Body with carrying handle	1) 3)	Additional colors upon request
Catch	2)	1) 4) 5) 6) 7) 8) 9) 10) 11) 12)

1) RAL 7035, light grey
2) HKS 43 K, signal blue
3) RAL 7016, anthracite
4) RAL 9004, black
5) RAL 1007, daffodil yellow
6) RAL 2011, deep orange
7) RAL 3002, carmine red
8) RAL 5015, sky blue
9) RAL 5003, sapphire blue
10) RAL 6001, emerald green
11) HKS 54 K, signal green
12) RAL 9016, white

BOTTOM INSERTS Systainer³ M

Base foam M, soft, 25 mm
- Art n° 83000036 (Industry customers*)
- Art n° 83570007 (Dealers/end users**)

Pick & pluck foam M, rigid, 25 mm***
- Art n° 83000038 (Industry customers*)
- Art n°. 83570009 (Dealers/end users**)

Base foam with cross cut-out
- Art n° 83000037 (Industry customers*)
- Art n° 83570008 (Dealers/end users**)

BOTTOM INSERTS Systainer³ L

Base foam M, soft, 25 mm
- Art n° 83000041 (Industry customers*)
- Art n° 83570011 (Dealers/end users**)

Pick & pluck foam M, rigid, 25 mm***
- Art n° 83000043 (Industry customers*)
- Art n° 83570012 (Dealers/end users**)

GOOD TO KNOW

- Open Systainer³ design provides optimal overview of the contents
- Hand tools and consumables easily at hand
- Can be carried comfortably thanks to the wide and moveable carrying handle
- Systainer³ ToolBox comes in 4 different dimensions

*Valid for industry customers. Unpacked in units **Valid for dealers and end users, packed individually ***Perforated cubes, 15 x 15 mm, for quarrying out

systainer®
Empty-systainer®

Systainer³ LID COMPARTMENT M

Keep everything sorted, easy to find, and right at hand! The Systainer³ lid compartment M is ideal for power tools with accessories. See immediately what parts, drill bits, or jigsaw blades you have thanks to the transparent lid. Separators allow for flexible division and custom organization of the lid compartment. The Systainer³ is a great way to store hand-held tools, power tools, accessories, small components or other work equipment.

Systainer³ lid compartment M 137 1)
- Light grey art n° 83000563
- Anthracite art n° 83000564

Systainer³ lid compartment M 187 2)
- Light grey art n° 83000561
- Anthracite art n° 83000562

Systainer³ lid compartment M 237 3)
- Light grey art n° 83000559
- Anthracite art n° 83000560

Incl. separators for variable division of the sections in the lid compartment:
4 x long separators,
10 x short separators,
8 x connectors

DIMENSIONS

Systainer³ lid compartment M 137

Outside in mm	Inside in mm	Weight	Carrying capacity	Inner volume	Pallet Pcs. / H.
H* 130 x W 396 x D 296	H 96 x W 389.5 x D 275	1.70 kg	20 kg	10.4 l	104 / 184.7 cm

Systainer³ lid compartment M 187

Outside in mm	Inside in mm	Weight	Carrying capacity	Inner volume	Pallet Pcs. / H.
H* 180 x W 396 x D 296	H 146 x W 389.7 x D 275.2	1.90 kg	20 kg	15.9 l	72 / 177.7 cm

Systainer³ lid compartment M 237

Outside in mm	Inside in mm	Weight	Carrying capacity	Inner volume	Pallet Pcs. / H.
H* 230 x W 396 x D 296	H 196 x W 389.7 x D 275.2	2.10 kg	20 kg	21.4 l	56 / 176.7 cm

*The outside dimensions are measured without feet: H + 7 mm

COLORS

	Standard colors	Additional colors
Body with lid	1) 3)	Additional colors upon request
Lid handle		4) 5) 6) 7) 8) 9) 10) 11) 12)
Catch	2)	1)

1) RAL 7035, light grey
2) HKS 43 K, signal blue
3) RAL 7016, anthracite
4) RAL 9004, black
5) RAL 1007, daffodil yellow
6) RAL 2011, deep orange
7) RAL 3002, carmine red
8) RAL 5015, sky blue
9) RAL 5003, sapphire blue
10) RAL 6001, emerald green
11) HKS 54 K, signal green
12) RAL 9016, white

LID INSERTS

Bit cassette
- Art n° 83000566
- for Systainer³ lid compartment M, consisting of 4 removable bit mounts with magnetic holder of 6 bits each

SDS cassette
- Art n° 83000565
- for Systainer³ lid compartment M, for 7 SDS drill bits diameter: 1 x 12, 1 x 10, 1 x 8, 3 x 6, 1 x 5

Lid foam M, vaulted
- Art n° 83000035 (Industry customers*)
- Art n° 83570006 (Dealers/end users**)

BOTTOM INSERTS

Base foam M, soft, 25 mm
- Art n° 83000036 (Industry customers*)
- Art n° 83570007 (Dealers/end users**)

Pick & pluck foam M, rigid, 25 mm*
- Art n° 83000038 (Industry customers*)
- Art n° 83570009 (Dealers/end users**)

Base foam with cross cut-out
- Art n° 83000037
- (Industry customers*)
- Art n° 83570008 (Dealers/end users**)

BOTTOM INSERTS Systainer³ LID COMPARTMENT M 137

Insert for cordless drill
- Art n° 83000053

BOTTOM INSERTS Systainer³ LID COMPARTMENT M 187

Insert for angle grinder Ø 125 mm
- Art n° 83000054

Insert for oscillator
- Art n° 83000055

Foam for fixation for insert for oscillator
- Art n° 83500077

BOTTOM INSERTS Systainer³ LID COMPARTMENT M 237

Set of 3 dividers
- Art n° 83500054

*Valid for industry customers. Unpacked in units **Valid for dealers and end users, packed individually *** Perforated cubes, 15 x 15 mm, for quarrying out

systainer®
Empty-systainer®

1)

2)

Systainer³ COMBI M

NEW

The perfect combination of systainer® and integrated drawer brings together what belongs together: large tools, sensitive equipment and small accessories neatly organised in a practical case system. The combined solution for the workshop and construction site is available in two different sizes.

Systainer³ Combi M 287 1)
- Light grey art n° 83000868
- Anthracite art n° 83000869

Systainer³ Combi M 337 2)
- Light grey art n° 83000870
- Anthracite art n° 83000871

Incl. 2 dividers

DIMENSIONS

Systainer³ Combi M 287

Outside in mm	Inside in mm	Weight	Carrying capacity	Inner volume	Pallet Pcs. / H.
H* 280 x W 396 x D 296	H 140 x W 389 x D 287	3.56 kg	20 kg	–	48 / 183.7 cm
Drawer	H 66 x W 343 x D 271	–	–	–	

Systainer³ Combi M 337

Outside in mm	Inside in mm	Weight	Carrying capacity	Inner volume	Pallet Pcs. / H.
H* 330 x W 396 x D 296	H 190 x W 389 x D 287	3.72 kg	20 kg	–	40 / 180.7 cm
Drawer	H 66 x W 343 x D 271	–	–	–	

*The outside dimensions are measured without feet: H + 7 mm

COLORS

	Standard colors	Additional colors
Body with lid	1) 3)	Additional colors upon request
Lid handle		4) 5) 6) 7) 8) 9) 10) 11) 12)
Catch	2)	1)

1) RAL 7035, light grey
2) HKS 43 K, signal blue
3) RAL 7016, anthracite
4) RAL 9004, black
5) RAL 1007, daffodil yellow
6) RAL 2011, deep orange
7) RAL 3002, carmine red
8) RAL 5015, sky blue
9) RAL 5003, sapphire blue
10) RAL 6001, emerald green
11) HKS 54 K, signal green
12) RAL 9016, white

LID INSERTS

Lid insert M, EPP, 5 mm
- Art n° 83000044

Lid foam M, vaulted
- Art n° 83000035 (Industry customers*)
- Art n° 83570006 (Dealers/end users**)

Office lid
- Art n° 83500069

BOTTOM INSERTS

Base foam M, soft, 25 mm
- Art n° 83000036 (Industry customers*)
- Art n° 83570007 (Dealers/end users**)

Pick & pluck foam M, rigid, 25 mm*
- Art n° 83000038 (Industry customers*)
- Art n° 83570009 (Dealers/end users**)

Base foam with cross cut-out
- Art n° 83000037
- (Industry customers*)
- Art n° 83570008 (Dealers/end users**)

Insert box set 50 x 50
- Art n° 83500055
- Set of 10
  D 50 x W 50 x H 68 mm

Insert box set 50 x 100
- Art n° 83500056
- Set of 10
  D 50 x W 100 x H 68 mm

Insert box set 100 x 100
- Art n° 83500057
- Set of 6
  D 100 x W 100 x H 68 mm

Insert box set 100 x 150
- Art n° 83500058
- Set of 6
  D 100 x W 150 x H 68 mm

BOTTOM INSERTS Systainer³ COMBI M 287

Insert for cordless drill
- Art n° 83000053

Insert for angle grinder Ø 125 mm
- Art n° 83000054

Insert for oscillator
- Art n° 83000055

Divider Systainer³, set of 3
- Art n° 83000880

BOTTOM INSERTS Systainer³ COMBI M 337

Insert for abrasives Ø 150 mm
- Art n° 83000057

Divider Systainer³, set of 3
- Art n° 83000880

*Valid for industry customers. Unpacked in units **Valid for dealers and end users, packed individually *** Perforated cubes, 15 x 15 mm, for quarrying out

systainer®
Empty-systainer®

1)

2)

Systainer³ SORTAINER M

NEW

The Systainer³ Sortainer not only offers space for countless small parts up to large packaging and loading devices, but also ensures optimum organization and flexibility in use with its drawer dividers and insert boxes. Available in two versions, the organizational system minimizes wasted time searching for missing parts and maximizes efficiency.

Systainer³ Sortainer/2 M 337 1)
- Incl. 2 dividers
- Light grey art n° 83000872
- Anthracite art n° 83000873

Systainer³ Sortainer/3 M 337 2)
- Incl. 2 dividers per drawer
- Light grey art n° 83000874
- Anthracite art n° 83000875

DIMENSIONS

Systainer³ Sortainer/2 M 337

Outside in mm	Inside in mm	Weight	Carrying capacity	Inner volume	Pallet Pcs. / H.
H* 330 x W 396 x D 296	–	5.18 kg	30 kg	–	40 / 180.7 cm
Small drawer	H 66 x W 343 x D 271	–	–	–	–
High drawer	H 158 x W 343 x D 261	–	–	–	–

Systainer³ Sortainer/3 M 337

Outside in mm	Inside in mm	Weight	Carrying capacity	Inner volume	Pallet Pcs. / H.
H* 330 x W 396 x D 296	–	6.22 kg	30 kg	–	40 / 180.7 cm
Drawer	H 66 x W 343 x D 271	–	–	–	–

*The outside dimensions are measured without feet: H + 7 mm

COLORS

	Standard colors	Additional colors
Body with lid	1) 3)	Additional colors upon request
Lid handle		4) 5) 6) 7) 8) 9) 10) 11) 12)
Catch	2)	1)

1) RAL 7035, light grey
2) HKS 43 K, signal blue
3) RAL 7016, anthracite
4) RAL 9004, black
5) RAL 1007, daffodil yellow
6) RAL 2011, deep orange
7) RAL 3002, carmine red
8) RAL 5015, sky blue
9) RAL 5003, sapphire blue
10) RAL 6001, emerald green
11) HKS 54 K, signal green
12) RAL 9016, white

BOTTOM INSERTS SMALL DRAWER

Insert box set 50 x 50
- Art n° 83500055
- Set of 10
  D 50 x W 50 x H 68 mm

Insert box set 50 x 100
- Art n° 83500056
- Set of 10
  D 50 x W 100 x H 68 mm

Insert box set 100 x 100
- Art n° 83500057
- Set of 6
  D 100 x W 100 x H 68 mm

Insert box set 100 x 150
- Art n° 83500058
- Set of 6
  D 100 x W 150 x H 68 mm

Divider Systainer³, set of 3
- Art n° 83000880

systainer®
Empty-systainer®

1)

2)

Systainer³ RACK M

NEW

The perfect rack for the construction site, workshop and when on the road. The Systainer³ Rack extends the systainer® range with a practical storage solution for a total of six Systainer³ S 76, ensuring clear, flexible and uniquely mobile sorting of small parts in the field.

Systainer³ Rack/0 M 337 1)
- Light grey art n° 83000876
- Anthracite art n° 83000877

Systainer³ Rack/6 M 337 2)
- Incl. 6 x Systainer³ S 76 (incl. 1 x divider large, 4 x divider small)
- Light grey art n° 83000878
- Anthracite art n° 83000879

DIMENSIONS

Systainer³ Rack/0 M 337

Outside in mm	Inside in mm	Weight	Carrying capacity	Inner volume	Pallet Pcs. / H.
H* 330 x W 396 x D 296	–	4.06 kg	–	–	40 / 180.7 cm

Systainer³ Rack/6 M 337

Outside in mm	Inside in mm	Weight	Carrying capacity	Inner volume	Pallet Pcs. / H.
H* 330 x W 396 x D 296	–	7.05 kg	20 kg	–	40 / 180.7 cm

*The outside dimensions are measured without feet: H + 7 mm

COLORS

	Standard colors	Additional colors
Body with lid	1) 3)	Additional colors upon request
Lid handle		4) 5) 6) 7) 8) 9) 10) 11) 12)
Catch	2)	1)

1) RAL 7035, light grey
2) HKS 43 K, signal blue
3) RAL 7016, anthracite
4) RAL 9004, black
5) RAL 1007, daffodil yellow
6) RAL 2011, deep orange
7) RAL 3002, carmine red
8) RAL 5015, sky blue
9) RAL 5003, sapphire blue
10) RAL 6001, emerald green
11) HKS 54 K, signal green
12) RAL 9016, white

Accessible
Whether linked in the systainer® tower or stowed away in the vehicle – the shelving system allows unrestricted access to the contents of the integrated Systainer³ S 76.

Organized
Maximum overview for up to six individually equipped Systainer³ S 76.

Purpose-orientated
Designed to hold up to six Systainer³ S 76. A practical push mechanism makes dispensing a breeze.

Linkable
Systainer³ Kompakt catch for simple connecting and linking with just a flick of the wrist.

Mobile
Can be integrated directly into bott vario3 van racking systems. The locking system of the Systainer³ Rack enables safe transport of the integrated Systainer³ S 76 in a van, on a cart or by hand.

Compatible
Systainer³ Rack can be combined with Systainer³, systainer® T-Loc and systainer® Classic-Line.

systainer®
Empty-systainer®

1)

2)

Systainer³ S 76

NEW

Despite its small size, the Systainer³ S 76 is a handy space saver. With a variety of practical inserts, Systainer³ S 76 is ideal for stowing small parts of all kinds. The best part: up to six Systainer³ S 76 can be integrated into the specially designed Systainer³ Rack M 337.

Systainer³ S 76 1)
- Light grey art n° 83000932
- Anthracite art n° 83000933

Systainer³ S 76, lid transparent 2)
- Light grey art n° 83000934

Systainer³ Rack M

DIMENSIONS

Systainer³ S 76

Outside in mm	Inside in mm	Weight	Carrying capacity	Inner volume	Pallet Pcs. / H.
H* 71 x W 265 x D 171	H 67 x W 258 x D 164	0.43 kg	5 kg	3.2 l	400 / 200 cm

Systainer³ S 76, transparent lid

Outside in mm	Inside in mm	Weight	Carrying capacity	Inner volume	Pallet Pcs. / H.
H* 71 x W 265 x D 171	H 67 x W 258 x D 164	0.43 kg	5 kg	3.2 l	400 / 200 cm

*The outside dimensions are measured without feet: H + 5 mm

COLORS

Systainer³ S 76

	Standard colors	Additional colors
Body with lid	1) 3)	Additional colors upon request
Lid handle		Additional colors upon request
Catch	2)	1) 4) 5) 6) 7) 8) 9) 10) 11) 12)

Systainer³ S 76, lid transparent

	Standard colors	Additional colors
Body with lid	1)	Additional colors upon request
Lid handle		Additional colors upon request
Catch	2)	1) 3) 4) 5) 6) 7) 8) 9) 10) 11) 12)

1) RAL 7035, light grey
2) HKS 43 K, signal blue
3) RAL 7016, anthracite
4) RAL 9004, black
5) RAL 1007, daffodil yellow
6) RAL 2011, deep orange
7) RAL 3002, carmine red
8) RAL 5015, sky blue
9) RAL 5003, sapphire blue
10) RAL 6001, emerald green
11) HKS 54 K, signal green
12) RAL 9016, white

Systainer³ S 76 SETS

Universal-Systainer³ S 76
- Light grey art n° 83500910
- Anthracite art n° 83500911
- With lid insert S, EPP and universal insert S

Systainer³ S 76 with dividers
- Light grey art n° 83000891
- Anthracite art n° 83000892
- Incl. 1 x divider large, 4 x divider small

Universal-Systainer³ S 76, transparent lid
- Light grey art n° 83500912
- With transparent cover and universal insert S

Systainer³ S 76, transparent lid with dividers
- Light grey art n° 83000893
- Incl. 1 x divider large, 4 x divider small

LID INSERTS

Lid insert S, EPP
- Art n° 83000911

Lid foam S, vaulted
- Art n° 83000917 (Industry customers*)
- Art n° 83500908 (Dealers/end users**)

Transparent cover
- Art n° 83500890
- For Systainer³ S 76, transparent lid
- Incl. fastening materials

BOTTOM INSERTS

Base foam S, vaulted
- Art n° 83000916 (Industry customers*)
- Art n° 83500907 (Dealers/end users**)

Pick & pluck foam S, soft, 40 mm
- Art n° 83000918 (Industry customers*)
- Art n° 83500909 (Dealers/end users**)

Perforated cubes, 10 x 10 mm, for quarrying out

Universal insert S
- Art n° 83000867
- 8 compartments

*Valid for industry customers. Unpacked in units **Valid for dealers and end users, packed individually

systainer®
Empty-systainer®

Systainer³ S 147

NEW

The Systainer³ S 147 is a real space saver despite its handy size. The latest generation of MINI-systainer® T-Loc can be fitted with a variety of practical inserts and is therefore ideal for stowing small parts of all kinds.

Systainer³ S 147
- Light grey art n° 83000894
- Anthracite art n° 83000895

DIMENSIONS

Outside in mm	Inside in mm	Weight	Carrying capacity	Inner volume	Pallet Pcs. / H.
H* 142 x W 265 x D 171	H 138 x W 258 x D 164	0.58 kg	5 kg	5.8 l	192 / 195 cm

*The outside dimensions are measured without feet: H + 5 mm

COLORS

	Standard colors	Additional colors
Body with lid	1) 3)	Additional colors upon request
Lid handle		Additional colors upon request
Catch	2)	1) 4) 5) 6) 7) 8) 9) 10) 11) 12)

1) RAL 7035, light grey
2) HKS 43 K, signal blue
3) RAL 7016, anthracite
4) RAL 9004, black
5) RAL 1007, daffodil yellow
6) RAL 2011, deep orange
7) RAL 3002, carmine red
8) RAL 5015, sky blue
9) RAL 5003, sapphire blue
10) RAL 6001, emerald green
11) HKS 54 K, signal green
12) RAL 9016, white

LID INSERTS

Lid insert S, EPP
- Art n° 83000911

Lid foam S, vaulted
- Art n° 83000917 (Industry customers*)
- Art n° 83500908 (Dealers/end users**)

BOTTOM INSERTS

Base foam S, vaulted
- Art n° 83000916 (Industry customers*)
- Art n° 83500907 (Dealers/end users**)

Pick & pluck foam S, soft, 40 mm
- Art n° 83000918 (Industry customers*)
- Art n° 83500909 (Dealers/end users**)

Perforated cubes, 10 x 10 mm, for quarrying out

*Valid for industry customers. Unpacked in units **Valid for dealers and end users, packed individually

systainer®
Textile-Systainer³

Systainer³ TOOLBAG M

NEW

Flexible organization meets intelligent design. The robust, convertible textile bag is a real master of transformation, individuality guaranteed. In just a few simple steps, it transforms from a bag into a perfectly organized storage system. The soft grip carrying handle and ergonomic shoulder strap ensure back-friendly, safe transport. Fully compatible with the entire systainer® family and bott van racking equipment racking system.

Systainer³ ToolBag M
- Material: Polyester (D600 PES), Anthracite
- Available only in one size and version
- Art n°83000619

Included in the scope of supply:
2 x 12-Pocket Tool Insert
2 x 4-Pocket Tool Insert
1 x Universal Bag
1 x ToolBag Carrying Strap

Systainer³ ToolBag M + 12-Pocket Tool Insert + 4-Pocket Tool Insert + Universal Bag + ToolBag Carrying Strap

DIMENSIONS

Systainer³ ToolBag M

Outside in mm	Inside in mm	Weight	Carrying capacity	Inner volume	Pallet Pcs. / H.
H* 359 x W 396 x D 296		3.68 kg	20 kg		24 / 168.4 cm

*The outside dimensions are measured without feet: H + 7 mm

ACCESSORIES*

12-Pocket and 4-Pocket Tool Insert

The Tool Insert is a practical accessory included with the Systainer³ ToolBag M. It can also be purchased as an add-on accessory. These inserts can be prepared for different jobs and easily fastened to the ToolBag in a matter of seconds with Velcro. The 4-Pocket Tool Insert can hold up to 4 hand tools, or the 12-Pocket Tool Insert can hold up to 12 hand tools such as pliers, hammers or screwdrivers such as pliers, hammers or screwdrivers can be stored and sorted in the loops provided.

12-Pocket Tool Insert

- Art n° 83000616
- for Systainer³ ToolBag M
- Base Material: Polyester (D600 PES), Anthracite
- with Velcro
- Outside H 60 x W 370 x D 190 mm
- Weight 0.14 kg

4-Pocket Tool Insert

- Art n° 83000617
- for Systainer³ ToolBag M
- Base Material: Polyester (D600 PES), Anthracite
- with Velcro
- Outside H 35 x W 370 x D 190 mm
- Weight 0.12 kg

Universal Bag

The Universal Bag can also be purchased as an additional extension. This Bag can quickly and easily be attached or replaced in the ToolBag with Velcro.

- Art n° 83000792
- for Systainer³ ToolBag M
- Base Material: Polyester (D600 PES), Anthracite
- with Velcro
- Outside H 60 x W 110 x D 275 mm
- Weight 0.04 kg

ToolBag Carrying Strap

The Carrying Strap can also be purchased as an add-on accessory. The adjustable carrying strap allows back-friendly transport of the ToolBag with a shoulder pad to relieve stress on the shoulder while carrying.

- Art n° 83000793
- for Systainer³ ToolBag M
- Base Material: Polyester (D600 PES), Anthracite
- with Self-Closing Triangle Hook
- Length 1,050-1,500 mm
- Weight 0.12 kg

*all accessories are included in the scope of supply of the Systainer³ ToolBag M

systainer®
Empty-systainer®

systainer® STORAGE-BOX

The easily removable systainer® Tool- and Storage-Boxes are the ideal companions for flexibility and mobility everywhere.

systainer® Storage-Box
- Light grey art n° 80101490
- Anthracite art n° 80101491
- With removable insert-boxes
  (2 x small, 2 x medium, 1 x big)

DIMENSIONS

Outside in mm	Inside in mm	Weight	Pallet Pcs. / H.
H* 160 x W 396 x D 296 Height with handle*: 233 mm	–	2.50 kg	88 / 196 cm

*The outside dimensions are measured without feet: H + 7 mm

COLORS

	Standard colors	Additional colors
Body and handle	1) 3)	
Catches	2)	1) 4) 5) 7) 8) 9) 10) 11) 12)

1) RAL 7035, light grey
2) HKS 43 K, signal blue
3) RAL 7016, anthracite
4) RAL 9004, black
5) RAL 1007, daffodil yellow
6) RAL 2011, deep orange
7) RAL 3002, carmine red
8) RAL 5015, sky blue
9) RAL 5003, sapphire blue
10) RAL 6001, emerald green
11) HKS 54 K, signal green
12) RAL 9016, white

BOTTOM INSERTS

Insert-box small
for systainer® Storage-Box
- Light grey art n° 80101555
- Outside dimensions:
  D 60 x W 60 x H 71 mm

Insert-box medium
for systainer® Storage-Box
- Light grey art n° 80101556
- Outside dimensions:
  D 60 x W 120 x H 71 mm

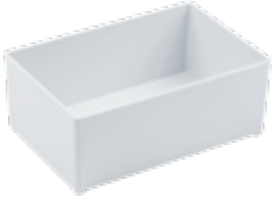

Insert-box big
for systainer® Storage-Box
- Light grey art n° 80101557
- Outside dimensions:
  D 120 x W 180 x H 71 mm

GOOD TO KNOW

- Excellent organisation of small parts with removable insert boxes
- Individual and flexible equipment
- Clear order of small parts
- Everything, from small parts to hand tools, always ready at hand

systainer®
Additions and accessories

INDIVIDUALIZATION

Whether you choose outside labelling for quick recognition of the contents, or our labelling system for the inside of the systainer® – there are various easy and uncomplicated ways to individualise your systainer®.

KENNZEICHNUNG

Label set for Systainer³ Organizer insert boxes
- Small Set art n° 83500051
- Consisting of 30 paper labels and 12 transparent plug-in labels
- Large Set art n° 83500052
- Consisting of 60 paper labels and 25 transparent plug-in labels

Label set for Systainer³
- Art n° 80500043
- Consisting of 20 transparent plug-in cards and 2 label sheets of 10 paper cards each
- For systainer® T-Loc I-V, systainer® T-Loc „SYS-Combi II + III“, Sortainer T-Loc „SYS-Sort IV/3“, Drawer „SYS-AZ“

Printing, adhesive labels, or plug-in card printing on requests – we will be glad to advise you about the countless possibilities.

SAFETY

Pull-tight seal
- Art n° 83500325
- 50 pieces
- For Systainer³ M, L, XXL, Organizer, Systainer³ lid compartment M, Systainer³ Combi M, Systainer³ S

SYSTAINER³ XXS

Systainer³ XXS 33
- Light grey art n° 83000089
- Outside dimensions: H 31.3 x W 105 x D 66 mm
- Inside dimensions: H 23 x W 102 x D 59 mm
- Weight: 0.04 kg

Insert for bits
- Art n° 83000279
- Insert for up to 18 bits and one bit holder

systainer®
Additions and accessories

FLEXIBLE AT ALL TIMES

The working environment is changing and flexible work times are today as much a part of the daily routine as flexible application sites. In our “Mobile Work” section you will find innovative systainer® solutions with which you can work any time, anywhere. Freedom all around!

MOBILE WORK

Mobile Workshop MW 1000 Basic
- Black/light grey/aluminium art n° 80102241
- Incl. 1 x drawer SYS-AZ-MW 1000
- Dimensions: L 641 x W 600 x H 1076 mm
- Work surface: 445 x 363 mm
- Working height: 900 mm
- Total load: 100 kg
- Weight: 19 kg

Mobile Workshop MW 1000
- Black/light grey/aluminium art n° 80591031
- Incl. 1 x drawer SYS-AZ-MW 1000 and table TSB/1-MW 1000
- Dimensions: L 641 x W 600 x H 1076 mm
- Work surface: 445 x 363 mm plus table TSB/1-MW 1000: 970 x 445 mm
- Working height: 900 mm
- Total load: 100 kg
- Weight: 31.2 kg

Drawer SYS-AZ-MW 1000
- Black/light grey art n° 80102243
- Dimensions: L 493 x W 373 x H 118 mm
- Total Load: 20 kg (assembled)
- Weight: 3.2 kg

Table TSB/1-MW 1000
- Aluminium/MDF art n° 80102244
- Dimensions: L 1045 x W 500 x H 74 mm
- Work surface: 970 x 445 mm
- Working height: 900 mm
- Total load: 100 kg
- Weight: 12.2 kg

MOBILE WORK

Systainer³ CART "SYS-RB"
- Light grey/blue art n° 83500064
- Anthracite art n° 83500065
- For Systainer³ M, L, XXL, Systainer³ Organizer M + L, Systainer³ lid compartment M, Systainer³ ToolBox M + L, MIDI-systainer® T-Loc II + III, systainer® T-Loc I - V, „SYS-Combi II + III", Sortainer T-Loc „SYS-Sort IV / 3", systainer® Tool-Box 1 + 2, and systainer® Storage-Box
- Even surface for the transport of various objects, integrated vehicle mount for bott vario3 vehicle equipment, four recessed grips on the sides for simple carrying, four swivel castors, two of them with brake function, big wheels (diameter: 100 mm) and wheel bases for optimal running
- Mount for tie-down straps
- Dimensions: H 159 x W 508 x D 396 mm
- Carrying capacity: 100 kg
- Net weight: 2.94 kg

Caster "SYS-CART"
- Anthracite art n° 80600421
- For Systainer³ M, Systainer³ Organizer M, Systainer³ lid compartment M, Systainer³ ToolBox M, systainer® T-Loc, Classic-Line I-V, systainer® T-Loc „SYS-Combi II + III", Sortainer T-Loc „SYS-Sort IV / 3", Drawer-systainer®, Rack-systainer® IV, systainer® Tool-Box 1 + 2 and systainer® Storage-Box
- Four swivel castors, two of them with brake function
- Big wheels (diameter: 100 mm) and wheel bases for optimal running, recessed grips on the sides and through holes for U-lock
- Dimensions: H 157 x W 519 x D 365 mm
- Carrying capacity: 100 kg
- Net weight: 3.1 kg

Transport trolley "SYS-Roll"
- Black/light grey art n° 80101699
- Comfortable transport of Systainer³ M, Systainer³ Organizer M, Systainer³ lid compartment M, Systainer³ ToolBox M, systainer® T-Loc and Classic Line I - V, systainer® T-Loc „SYS-Combi II + III", Sortainer T-Loc „SYS-Sort IV / 3", Drawer-systainer®, Rack-systainer® IV, systainer® Tool-Box 1 + 2 and systainer® Storage-Box
- Roll board and sack barrow function
- Easy transportation up and down steps due to extra large wheels
- Rotating and lockable front wheels
- Integrated drawer for storing small parts
- Variably adjustable safety belt included
- Wheels-Ø front: 75 mm
- Wheels-Ø back: 200 mm
- Dimensions: H 1,100 x W 600 x D 440 mm
- Weight: 9.4 kg
- Carrying capacity: 100 kg
- Carrying capacity drawer: 5 kg

systainer®
Additions and accessories

MOBILE WORK

Transport trolley “MAXI-TRAPO”
- Light grey/blue art n° 83570001
- For Systainer³ M, L, XXL, Systainer³ ToolBox M + L, Systainer³ lid compartment M, Systainer³ Organizer M + L, systainer® I - V, MIDI-systainer® T-Loc II + III, systainer® T-Loc „SYS-Combi II + III“, Sortainer T-Loc „SYS-Sort IV / 3“, Drawer-systainer®, Rack-systainer® IV, MAXI-systainer® II + III, systainer® Tool-Box 1 + 2 and systainer® Storage-Box
- With foldable carrier frame (L 425 x W 280 mm)
- Light running wheels with wheel covers and curved handle for a comfortable use even when it is heavy loadedg
- Carrying capacity: 150 kg
- Net weight: 12 kg
- Height: 1,100 mm

Safety strap for “MAXI-TRAPO”
- Blue/black, length: 1500 mm art n° 83570000
- Blue/black, length: 2500 mm art n° 83570154
- To be clipped on the frame work

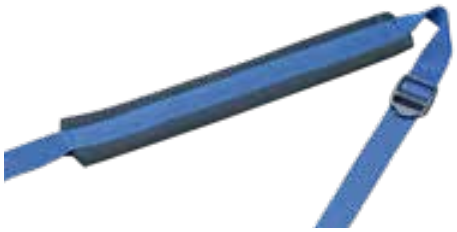

Carrying strap
- Blue/black art n° 83570002
- For the fixation on the handle
- For Systainer³ M, L, XXL, Systainer³ lid compartment M, Systainer³ ToolBox M + L, systainer® T-Loc „SYS-Combi II + III“, Sortainer T-Loc „SYS-Sort IV / 3“, Drawer-systainer®, Rack-systainer® IV, MAXI-systainer® II + III, systainer® Tool-Box 1 + 2 and systainer® Storage-Box
- With shoulder pad and adjustable strap

LITTLE HELPERS – BIG RESULTS

Our developers and product managers are working day in day out on new ideas and innovations for every greater user friendliness. It is often the little useful accessories which provide the greatest services.

STATIONARY WORK

Systainer³ BASE – wall/base support
- Light grey/blue art n° 83500067
- Anthracite art n° 83500068
- For Systainer³ M, L, XXL, Systainer³ Organizer M + L, Systainer³ lid compartment M, Systainer³ ToolBox M + L
- Delivery without fastening materials!
- Dimensions: H 48 x W 508 x D 396 mm
- Net weight: 1.59 kg

Wall/base support "SYS-CART Base"
- Light grey/blue art n° 80590551
- For Systainer³ M, Systainer³ lid compartment M, Systainer³ ToolBox M and systainer® Storage-Box
- 4 recesses for the fixation with fastening (Delivery without fastening!)
- Dimensions: H 46 x W 519 x D 365 mm
- Net weight: 1.55 kg

Drawer "SYS-AZ"
- Individual light grey art n° 80101664
- Set of 5 light grey art n° 80590641
- Pull-out shelf, suitable for all systainer®-generations except Systainer³ L, XXL, Systainer³ Organizer L, Systainer³ ToolBox L, Systainer³ S MINI-, MIDI-, MAXI-systainer®
- Telescopic rails are suitable for 32 mm hole line for a variable positioning of the systainer® in your individual furnishing system
- High quality full extension slide allows to open the lid of the systainer® completely
- Centred operating element in anthracite for locking / unlocking. Simple and fast self-assembly
- Individual labelling possible thanks to integrated field for plug-in cards. Barrel lock can be added
- Outside dimensions: H 57 x W 425 x D 376 mm
- Inside dimensions: H 50 x W 395 x D 300 mm
- Weight: 2.23 kg / pc.
- Carrying capacity: 20 kg

Barrel lock for drawer "SYS-AZ"
- Art n° 80101665
- Consists of a lock with 2 keys and a locking nut.
- For the safe storage of precious tools. Simple and fast self-assembly

systainer®
Additions and accessories

REPLACEMENT MADE EASY

We attach great importance to flexibility and a long product life. Therefore, all systainer® components such as lid, handle or catches are easy to replace.

SPARES

Systainer³ catch
- For Systainer³ M, L, XXL, Systainer³ lid compartment M, Systainer³ Combi M, Systainer³ ToolBox
- 12 colors

Systainer³ Organizer catch
- For Systainer³ Organizer
- 12 colors

NEW

Systainer³ S catch
- For Systainer³ S 76 + 147, Systainer³ S 76, transparent lid
- 12 colors

Systainer³ Compact catch
- Signal blue Art n° 83570026
- Anthracite Art n° 83570027

Systainer³ Pin
- For all Systainer³ except Systainer³ S, Sortainer
- Light grey art n° 83570018
- Anthracite art n° 83570024

Systainer³ lid handle
- For all Systainer³ except Systainer³ S, Organizer, ToolBox
- Light grey art n° 83570019
- Anthracite art n° 83570025

Systainer³ M lid without handle + catch
- For Systainer³ M
- Light grey art n° 83570020

Systainer³ L lid without handle + catch
- For Systainer³ L
- Light grey art n° 83570021

Systainer³ front handle
- For Systainer³ heights with front handle 112-187, Systainer³ Organizer, Systainer³ lid compartment M 137+187
- Light grey art n° 83500329
- Anthracite art n° 83500330

COLORS

	Standard colors		Additional colors									
Systainer³ catch	2)	3)	1)	4)	5)	6)	7)	8)	9)	10)	11)	12)
Systainer³ Organizer catch												
Systainer³ S catch												
Systainer³ Compact catch												
Systainer³ lid handle	1)											

1) RAL 7035, light grey
2) HKS 43 K, signal blue
3) RAL 7016, anthracite
4) RAL 9004, black
5) RAL 1007, daffodil yellow
6) RAL 2011, deep orange
7) RAL 3002, carmine red
8) RAL 5015, sky blue
9) RAL 5003, sapphire blue
10) RAL 6001, emerald green
11) HKS 54 K, signal green
12) RAL 9016, white

SPARES

T-Loc catch
- For systainer® T-Loc I-V, MIDI-systainer® T-Loc II + III, systainer T-Loc “SYS-Combi II + III”
- 12 colors

T-Loc catch
- For MINI-systainer® T-Loc I + III
- 12 colors

SYS-Sort catch
- For Sortainer T-Loc “SYS-Sort IV / 3”
- 12 colors

Catches
- For MAXI-systainer®, Drawer-systainer®, Rack-systainer®, systainer® Tool-Box 1 + 2 and systainer® Storage-Box
- 11 colors

Pin
- For systainer® T-Loc I - V lid MIDI-systainer® T-Loc II + III, systainer® T-Loc “SYS-Combi II + III”
- Light grey art n° 83570102
- Anthracite art n° 83570103

T-Loc handle
- For systainer® T-Loc I - V, MIDI-systainer® T-Loc II + III, systainer® T-Loc “SYS-Combi II + III” and Sortainer T-Loc “SYS-Sort IV / 3”
- Light grey art n° 83570081
- Anthracite art n° 83570082

COLORS

	Standard colors		Additional colors									
T-Loc catch	2)	3)	1)	4)	5)	6)	7)	8)	9)	10)	11)	12)
SYS-Sort catch												
Catches												
T-Loc handle	1)											

1) RAL 7035, light grey
2) HKS 43 K, signal blue
3) RAL 7016, anthracite
4) RAL 9004, black
5) RAL 1007, daffodil yellow
6) RAL 2011, deep orange
7) RAL 3002, carmine red
8) RAL 5015, sky blue
9) RAL 5003, sapphire blue
10) RAL 6001, emerald green
11) HKS 54 K, signal green
12) RAL 9016, white

systainer®
Additions and accessories

SPARES

T-Loc lid without handle + catch
- For systainer® T-Loc I-V, systainer® T-Loc „SYS-Combi II + III“
- Light grey art n° 83570120

Slide for “SYS-CART”, set of 2
- Signal blue art n° 80590811
- Anthracite art n° 80590957

Sliding rails for “SYS-Roll”, set of 2
- Black art n° 83570144

Thermal switch for “SYS-PH”
- Art n° 83570133

Cable with plug for “SYS-PH”
- EU art n° 83570134
- DK art n° 83570135
- CH art n° 83570136
- GB art n° 83570137

Socket for “SYS-PH”
- TYP F (DE/NL/SE/AT/HU/FI/LT) art n° 83570138
- TYP F (IT/ES) art n° 83570139
- TYP K (DK) art n° 83570140
- TYP J (CH) art n° 83570141
- TYP G (GB) art n° 83570142
- TYP E (FR/BE/CZ/SK/PL) art n° 83570143

SPARES – MOBILE WORKSHOP

1

Work surface made of MDF for Mobile Workshop MW 1000 Basic
- Art n° 80591089
- Dimensions: 445 x 363 mm
- Incl. fastening materials

2

Work surface made of MDF for table TSB/1-MW 1000
- Art n° 80591086
- Dimensions: 970 x 445 mm
- Incl. fastening materials

3

Slide element for Mobile Workshop MW 1000 Basic
- Art n° 80591088
- 2 pieces
- Incl. fastening materials

4

Spacer for Mobile Workshop MW 1000 Basic
- Art n° 80591090
- Set of 2

5

Foot for Mobile Workshop MW 1000 Basic and table TSB/1-MW 1000
- Art n° 80591087

6

Table connector for table TSB/1-MW 1000
- Art n° 80591085
- Incl. fastening materials

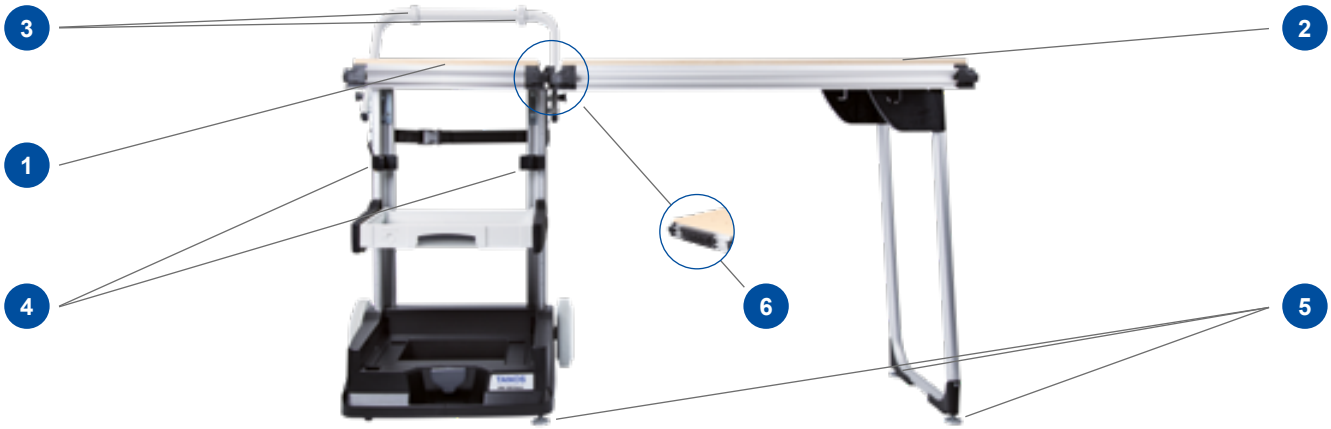

TANOS

Illustrations in life size

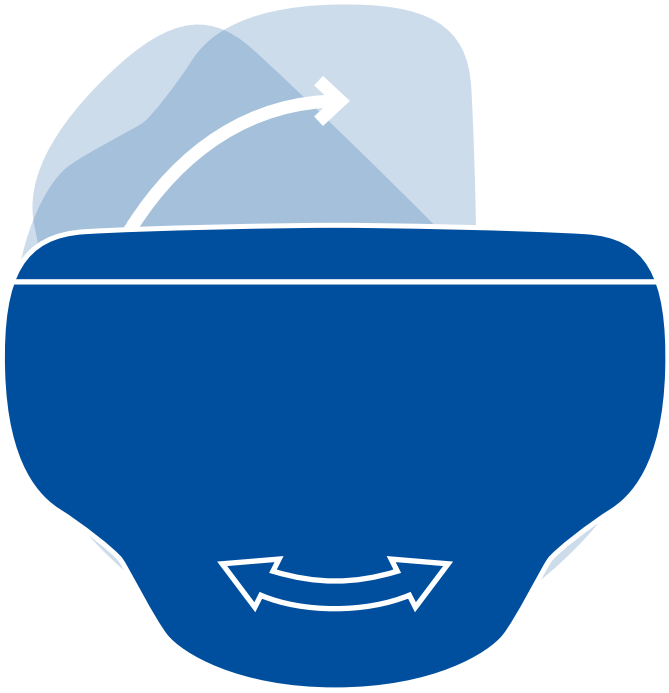

Systainer³

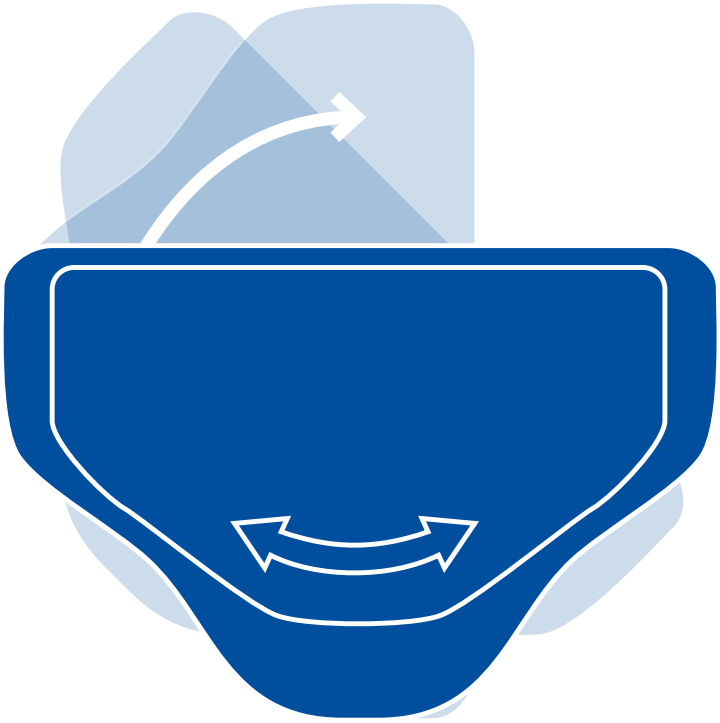

systainer® T-Loc

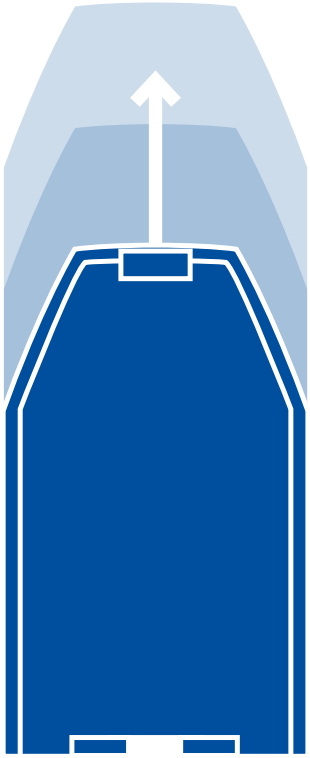

systainer® CLASSIC-Line

Issue: 02/2024. We reserve the right to make product modifications, misprints and errors. Please consult the instructions before using any product.
All illustrations are non-binding. Decorations and product examples not included in the scope of supply.

Art n° 80002869 | EN

TANOS GmbH

Pionierstraße 1; D - 89257 Illertissen, Germany
Phone +49 (0)7303 / 165 302 - 00; Fax +49 (0)7303 / 165 302 - 31
info@TANOS.de; www.TANOS.de